STIFFNESS LOSS DUE TO TRANSVERSE CRACKING AND SPLITTING IN CROSS-PLY LAMINATES UNDER BIAXIAL LOADING

Maria Kashtalyan and Costas Soutis

Department of Aeronautics, Imperial College of Science, Technology and Medicine
Prince Consort Road, London SW7 2BY, UK

SUMMARY: In an effort to evaluate the stiffness degradation of composite cross-ply laminates due to matrix cracking both in the 90° and 0° plies, a new theoretical approach was developed. It employs the Equivalent Constraint Model (ECM) [1, 2] and subsequent an improved 2-D shear lag analysis to determine stress field in the damaged laminate. In-situ Damage Effective Functions (IDEFs), used to describe stiffness reduction of the cracked or split lamina, were found to depend explicitly upon the crack density in the damaged lamina and implicitly upon the crack density of the neighbouring lamina. Theoretical predictions for CFRP and GFRP laminates revealed significant reduction in the shear modulus and Poisson's ratio due to splitting. Comparison of the new approach with existing models has shown reasonable agreement.

KEYWORDS: transverse cracking, splitting, cross-ply laminates, stiffness degradation, 2-D shear lag analysis, Equivalent Constraint Model

INTRODUCTION

Matrix cracking has long been recognised as the first damage mode observed in composite laminates under static and fatigue tensile loading. Although it does not necessarily result in the immediate catastrophic failure and therefore can be tolerated, its presence causes stiffness degradation and is detrimental to the strength of the laminate. It also triggers development of other harmful resin-dominated damage modes, such as edge and local delaminations, which can cause fibre-breakage in the primary load-bearing plies.

During the last three decades matrix cracking in composite laminates has been the subject of extensive research, both theoretical and experimental. A number of theories appeared (see, e.g., comprehensive reviews [3, 4]), attempted to predict initiation of matrix cracking and describe its effect on the laminate stiffness properties, mostly cross-ply ones subjected to uniaxial loading. In the recent years the focus of investigations into the matrix cracking phenomenon has shifted, in particular, towards matrix cracking in the off-axis plies [5, 6], multilayer matrix cracking [7, 8] and matrix cracking interacting with other damage modes, such as edge and local delaminations [9, 10].

The problem of matrix cracking occurring both in the 90° plies (transverse cracking) and 0° plies (splitting) of cross-ply laminates has received so far considerably less attention [11-14], presumably, due to its complexity. In [12], a strict lower bound for the axial modulus and an approximate value of the Poisson's ratio were obtained for orthogonally cracked cross-ply laminates, following variational treatment of the problem on stiffness reduction under uniaxial tension on the basis of the principle of minimum complementary energy. A finite differences iteration method was used in [13] to solve a system of governing equations of the interlaminar-shear analysis in order to predict the shear modulus reduction due to transverse cracking and splitting. Experimental results for AS4/3501-6 CFRP laminates appeared to be in a good agreement with the theoretical predictions. Transversally cracked and split cross-ply laminates under general in-plane and biaxial thermal loading were also examined in [14]. While evaluating elastic constants of the damaged laminate, it was assumed in [14] that the elastic constants of a cracked lamina depend only on the crack spacing in that lamina, but not on the crack density in the adjacent plies. It appears that at present there are few theoretical models that can successfully predict reduction of all in-plane elastic properties of cross-ply laminates due to transverse cracking and splitting under general in-plane loading. None of the existing models seems to be simple enough to allow any feasible generalisation, with a purpose to describe delaminations growing from crack/split tips.

THEORETICAL MODELLING

The objective of the present study is to evaluate the reduced stiffness properties of $[0_m/90_n]_s$ laminates, damaged by transverse cracking in the 90° layer and splitting in the 0° layer with uniform crack spacings $2s_2$ and $2s_1$, respectively (Fig. 1). The laminate is subjected to biaxial tension $\bar{\sigma}_{11}$, $\bar{\sigma}_{22}$ and in-plane shear loading $\bar{\sigma}_{12}$.

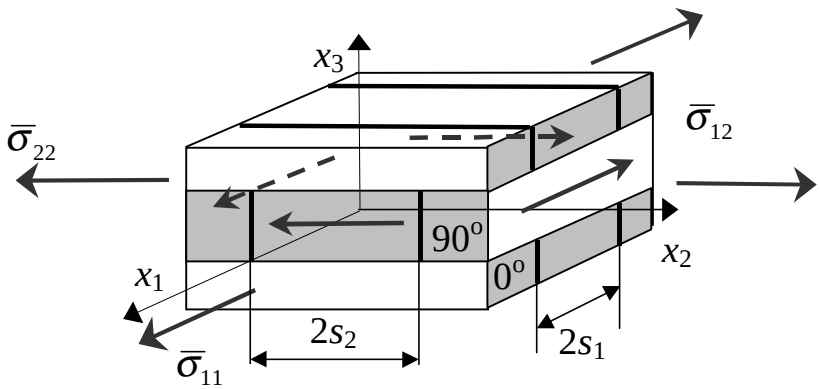

Fig. 1: Cross-ply laminate damaged by transverse cracking and splitting

As against to the models [11-14], based on consideration of a repeated laminate element defined by the intersecting pairs of transverse cracks and splits, the present approach employs the Equivalent Constraint Model (ECM) of the damaged laminate introduced in [1, 2]. Instead of considering the damaged laminate configuration, shown on Fig. 1, the following two 'equivalent constraint models' of it will be analysed simultaneously. In the ECM1 (Fig. 2a), the 0° layer (1st layer) contains damage explicitly, while the transversally cracked 90° layer (2nd layer) is replaced with the i.e. homogeneous orthotropic layer with reduced stiffness. Likewise, in the ECM2 (Fig. 2b), the 90° layer is damaged explicitly, while the split 0° layer is replaced with the homogeneous 'equivalent constraint' one.

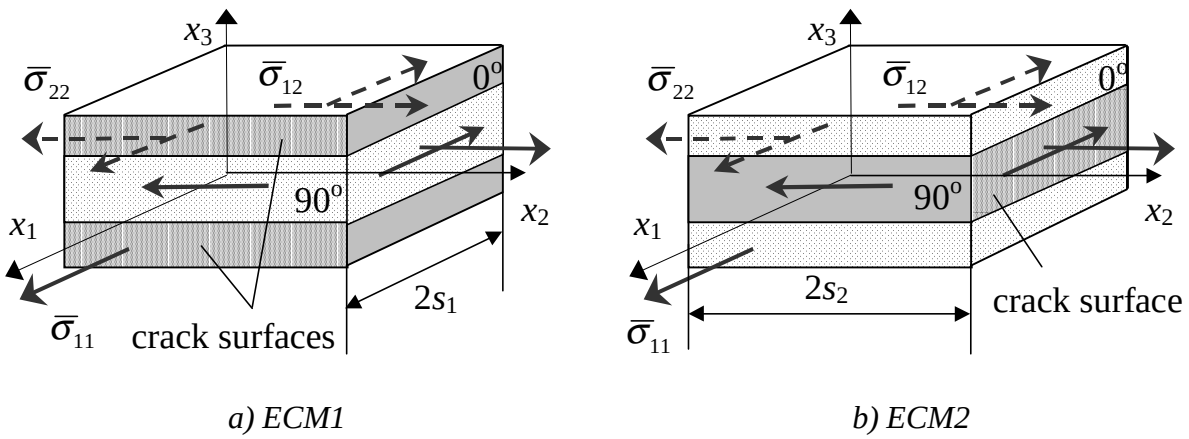

a) ECM1 *b) ECM2*

Fig. 2: Representative segments of the 'equivalent constraint models' of the damaged laminate

The purpose of the macro- and micromechanical analysis of the ECM μ (i.e. ECM1 if $\mu = 1$ and ECM2 if $\mu = 2$) is to determine the reduced stiffness properties of the explicitly damaged μ^{th} layer as functions of the damage parameters (cracking and splitting density). Since the cracked lamina within the laminate retains certain amount of load-carrying capacity owing to stress transfer via neighbouring plies, they will also depend upon the reduced stiffness properties of the 'equivalent constraint' κ^{th} layer, $\kappa \neq \mu$, which can be determined from the analysis of ECM κ. Thus, problems for ECM1 and ECM2 are inter-related. In the absence of splitting, analysis of ECM2 coincides with that performed earlier in [1].

Macromechanical Analysis

The reduced stiffness properties of the μth layer, damaged by transverse cracking or splitting, can be determined by applying the laminate plate theory to the ECMμ after replacing the explicitly damaged layer with an equivalent homogeneous one. The reduced in-plane stiffness matrix $[Q^{(\mu)}]$ of the homogeneous layer equivalent to the μth layer of the ECMμ is related to the in-plane stiffness matrix $[\hat{Q}^{(\mu)}]$ of the layer without damage via the In-situ Damage Effective Functions (IDEFs) $\Lambda_{22}^{(\mu)}, \Lambda_{66}^{(\mu)}$, introduced in [1, 2], as

$$[Q^{(\mu)}] = [\hat{Q}^{(\mu)}] - \begin{bmatrix} \hat{R}_{11}^{(\mu)}\Lambda_{22}^{(\mu)} & \hat{Q}_{12}^{(\mu)}\Lambda_{22}^{(\mu)} & 0 \\ \hat{Q}_{12}^{(\mu)}\Lambda_{22}^{(\mu)} & \hat{R}_{22}^{(\mu)}\Lambda_{22}^{(\mu)} & 0 \\ 0 & 0 & \hat{Q}_{66}^{(\mu)}\Lambda_{66}^{(\mu)} \end{bmatrix} \tag{1}$$
$$\hat{R}_{11}^{(1)} = \hat{Q}_{11}^{(1)}, \quad \hat{R}_{22}^{(1)} = (\hat{Q}_{12}^{(1)})^2(\hat{Q}_{11}^{(1)})^{-1}, \quad \hat{R}_{11}^{(2)} = (\hat{Q}_{12}^{(2)})^2(\hat{Q}_{22}^{(2)})^{-1}, \quad \hat{R}_{22}^{(2)} = \hat{Q}_{22}^{(2)}$$

From Eqn 1 and the constitutive equations for the μth layer, the IDEFs $\Lambda_{22}^{(\mu)}, \Lambda_{66}^{(\mu)}$ can be expressed in terms of macrostresses $\bar{\sigma}_{ij}^{(\mu,k)}$ and macrostrains $\bar{\varepsilon}_{ij}^{(\mu,k)}$ in the kth layer of the ECMμ

$$\Lambda_{22}^{(1)} = 1 - \frac{\bar{\sigma}_{11}^{(1,1)}}{\hat{Q}_{11}^{(1)}\bar{\varepsilon}_{11}^{(1,1)} + \hat{Q}_{12}^{(1)}\bar{\varepsilon}_{22}^{(1,1)}}, \quad \Lambda_{22}^{(2)} = 1 - \frac{\bar{\sigma}_{22}^{(2,2)}}{\hat{Q}_{12}^{(2)}\bar{\varepsilon}_{11}^{(2,2)} + \hat{Q}_{22}^{(2)}\bar{\varepsilon}_{22}^{(2,2)}}$$
$$\Lambda_{66}^{(\mu)} = 1 - \frac{\bar{\sigma}_{12}^{(\mu,\mu)}}{\hat{Q}_{66}^{(\mu)}\bar{\varepsilon}_{12}^{(\mu,\mu)}}, \quad \mu = 1,2 \tag{2}$$

Once the in-plane microstresses $\tilde{\sigma}_{ij}^{(\mu,k)}$ and microstrains $\tilde{\varepsilon}_{ij}^{(\mu,k)}$ in the kth layer (i.e. stresses and strains averaged across the thickness of the kth layer and the width of the ECMμ) are known from the micromechanical analysis, the macrostresses and macrostrains can be found as

$$\bar{\sigma}_{j\mu}^{(\mu,\mu)} = \frac{1}{2s_\mu}\int_{-s_\mu}^{s_\mu}\tilde{\sigma}_{j\mu}^{(\mu,\mu)}dx_\mu, \quad j=1,2, \quad \mu=1,2$$
$$\bar{\varepsilon}_{ij}^{(\mu,\mu)} = \bar{\varepsilon}_{ij}^{(\mu,\kappa)} = \bar{\varepsilon}_{ij} = \frac{1}{2s_\mu}\int_{-s_\mu}^{s_\mu}\tilde{\varepsilon}_{ij}^{(\mu,\kappa)}dx_\mu, \quad \kappa\neq\mu, \quad i,j=1,2 \tag{3}$$

Micromechanical Analysis

For the kth layer of the ECMμ , the equilibrium equations in terms of microstresses are

$$\frac{d}{dx_\mu}\tilde{\sigma}_{j\mu}^{(\mu,k)} + (-1)^k\frac{\tau_j^{(\mu)}}{h_k} = 0, \quad \mu=1,2 \quad j=1,2 \quad k=1,2 \tag{4}$$

Here $\tau_j^{(\mu)}$ are the interface shear stresses at the (0/90) interfaces of the ECMμ in the jth direction, and h_k is the thickness of the kth layer. The in-plane microstresses are related to the total stresses $\bar{\sigma}_{ij}$ applied to the laminate by the laminate equilibrium equations

$$\chi\tilde{\sigma}_{ij}^{(\mu,1)} + \tilde{\sigma}_{ij}^{(\mu,2)} = (1+\chi)\bar{\sigma}_{ij}, \quad i,j=1,2, \quad \chi = h_1/h_2 \tag{5}$$

To determine the in-plane microstresses from the equilibrium equations (Eqns 4, 5), the interface shear stresses $\tau_j^{(\mu)}$ are expressed in terms of the in-plane displacements $\tilde{u}_j^{(\mu,k)}$, $j=1,2$ by averaging the out-of-plane constitutive equations across the layer thickness and making an assumption about the variation of the out-of-plane shear stresses as

$$\tau_j^{(\mu)} = K_j(\tilde{u}_j^{(\mu,1)} - \tilde{u}_j^{(\mu,2)}), \qquad K_j = \frac{3\hat{G}_{j3}^{(1)}\hat{G}_{j3}^{(2)}}{h_2\hat{G}_{j3}^{(1)} + (1+(1-\eta)/2)\eta h_1\hat{G}_{j3}^{(2)}}, \quad \eta = \frac{h_s}{h_1} \tag{6}$$

The shear-lag parameters K_j in Eqn 6 are the same for ECM1 and ECM2 because the out-of-plane shear moduli $\hat{G}_{j3}^{(k)}$, $j=1,2$ of the damaged layers are not affected by the presence of aligned microcracks. Within the present 2-D shear lag approach, the out-of-plane shear stresses $\sigma_{j3}^{(\mu,k)}$, $j=1,2$ were assumed vary linearly with x_3. To achieve better description of stress field in the laminates with thick 0° layers, variation of the out-of-plane shear stresses in the 0° layer was assumed to be restricted to the shear layer of the thickness h_s (usually taken equal to one ply thickness)

$$\sigma_{j3}^{(\mu,1)} = \frac{\tau_j^{(\mu)}}{h_s}(h_2+h_s-x_3) \quad h_2 \le |x_3| \le h_s \qquad \sigma_{j3}^{(\mu,2)} = \frac{\tau_j^{(\mu)}}{h_2}x_3 \quad |x_3| \le h_2, \quad j=1,2 \tag{7}$$

The equilibrium equations (Eqn 4, 5), expressions for the interface shear stresses (Eqn 6), and the stress-strain relationships provide a full set of equations for determination of the in-plane microstresses $\tilde{\sigma}_{j\mu}^{(\mu,\mu)}$ $j,\mu=1,2$. By reducing them to single second order ordinary differential equations, the in-plane microstresses in the explicitly damaged μ^{th} layer of the ECMμ are found as

$$\begin{aligned}\tilde{\sigma}_{\mu\mu}^{(\mu,\mu)} &= \frac{1}{L_1^{(\mu)}}\left(1-\frac{\cosh[\sqrt{L_1^{(\mu)}}\,x_\mu]}{\cosh[\sqrt{L_1^{(\mu)}}\,s_\mu]}\right)(\Omega_{11}^{(\mu)}\bar{\sigma}_{11}+\Omega_{22}^{(\mu)}\bar{\sigma}_{22})\\ \tilde{\sigma}_{12}^{(\mu,\mu)} &= \frac{1}{L_2^{(\mu)}}\left(1-\frac{\cosh[\sqrt{L_2^{(\mu)}}\,x_\mu]}{\cosh[\sqrt{L_2^{(\mu)}}\,s_\mu]}\right)\Omega_{12}^{(\mu)}\bar{\sigma}_{12}\end{aligned} \tag{8}$$

Here $L_1^{(\mu)}, L_1^{(\mu)}, \Omega_{11}^{(\mu)}, \Omega_{22}^{(\mu)}, \Omega_{12}^{(\mu)}$ are the laminate constants depending on the virgin compliances $\hat{S}_{ij}^{(\mu)}$ of the explicitly damaged μ^{th} layer, the modified compliances $S_{ij}^{(\kappa)}, \kappa\neq\mu$ of the 'equivalent constraint' κ^{th} layer, the shear lag parameters K_j and the layer thickness ratio $\chi = h_1/h_2$. By substituting Eqn 8 into Eqn 3 and then into Eqn 2, closed-form expressions are obtained for IDEFs associated with the μth layer, representing them as explicit functions of damage parameters $D_\mu^{mc}=h_\mu/s_\mu$ for this layer

$$\Lambda_{22}^{(\mu)} = 1-\frac{1-\dfrac{D_\mu^{mc}}{\lambda_1^{(\mu)}}\tanh\left[\dfrac{\lambda_1^{(\mu)}}{D_\mu^{mc}}\right]}{1+\alpha_1^{(\mu)}\dfrac{D_\mu^{mc}}{\lambda_1^{(\mu)}}\tanh\left[\dfrac{\lambda_1^{(\mu)}}{D_\mu^{mc}}\right]},\quad \Lambda_{66}^{(\mu)} = 1-\frac{1-\dfrac{D_\mu^{mc}}{\lambda_2^{(\mu)}}\tanh\left[\dfrac{\lambda_2^{(\mu)}}{D_\mu^{mc}}\right]}{1+\alpha_2^{(\mu)}\dfrac{D_\mu^{mc}}{\lambda_2^{(\mu)}}\tanh\left[\dfrac{\lambda_2^{(\mu)}}{D_\mu^{mc}}\right]},\quad \mu=1,2 \tag{9}$$

Here the constants $\lambda_i^{(\mu)}$ and $\alpha_i^{(\mu)}, i=1,2$, depend solely on the layer compliances $\hat{S}_{ij}^{(\mu)}, S_{ij}^{(\kappa)}, \kappa\neq\mu$, the shear lag parameters K_j and the layer thickness ratio χ.

The IDEFs for the μth layer depend implicitly on the damage parameter $D_\kappa^{mc}=h_\kappa/s_\kappa$ associated with the κth layer, since the modified compliances $S_{ij}^{(\kappa)}, \kappa\neq\mu$ of the 'equivalent constraint' κ^{th} layer of the ECMμ, determined from the analysis of the ECMκ, are functions of the IDEFs $\Lambda_{22}^{(\kappa)}, \Lambda_{66}^{(\kappa)}$. The IDEFs form a system of simultaneous nonlinear algebraic equations

$$\begin{aligned}\Lambda_{qq}^{(1)} &= \Lambda_{qq}^{(1)}(D_1^{mc}, \hat{S}_{ij}^{(1)}, S_{ij}^{(2)}(D_2^{mc}, \hat{S}_{ij}^{(2)}, \Lambda_{qq}^{(2)}), \chi), \quad q=2,6\\ \Lambda_{qq}^{(2)} &= \Lambda_{qq}^{(2)}(D_2^{mc}, \hat{S}_{ij}^{(2)}, S_{ij}^{(1)}(D_1^{mc}, \hat{S}_{ij}^{(1)}, \Lambda_{qq}^{(1)}), \chi), \quad q=2,6\end{aligned} \tag{10}$$

It is solved computationally by a direct iterative procedure, carried out in such a way that the newly calculated IDEFs are used to evaluate the reduced stiffnesses of the 'equivalent constraining' layer until the difference between two iterative steps meets the prescribed accuracy. As a result, all four IDEFs are determined as functions of two damage parameters, D_1^{mc} and D_2^{mc}.

VERIFICATION OF THE MODEL

Comparison of the ECM/2-D shear lag approach with existing models [12, 13] reveals the predictive capability of the new model. Table 1 contains data on the axial (i.e. 0° fibre direction) modulus reduction ratio $E_A / \hat{E}_A$ for transversally cracked and split GFRP and CFRP laminates considered earlier by Hashin [12]. Since Hashin evaluates the axial modulus of a cracked laminate on the basis of the principle of minimum complementary energy, his predictions are supposed to provide the rigorous lower bound for the reduced axial modulus value. It may be seen that the new ECM/2-D shear lag approach delivers results, which not only comply with this expectation, but also are very close to it. Predictions for the CFRP laminates are the closest ones. For the GFRP system, results for $[0/90]_s$ laminate are closer to the lower bound than those observed for the lay-up with thicker 90° layer, $[0/90_3]_s$.

Table 1: Axial modulus reduction ratio $E_A / \hat{E}_A$

$D_1^{mc} = D_2^{mc}$	GFRP $[0/90]_s$		GFRP $[0/90_3]_s$		CFRP $[0/90]_s$	
	[12]	present model	[12]	present model	[12]	present model
0.02	0.990	0.992	0.980	0.985	0.999	0.999
0.05	0.975	0.980	0.951	0.962	0.997	0.997
0.1	0.951	0.961	0.906	0.927	0.994	0.995
0.2	0.907	0.925	0.829	0.863	0.988	0.990
0.33	0.853	0.882	0.743	0.792	0.981	0.984
0.5	0.804	0.841	0.658	0.718	0.974	0.979
1.0	0.762	0.787	0.542	0.602	0.969	0.972
2.0	0.757	0.765	0.516	0.541	0.968	0.969

Predictions for the Poisson's ratio ν_A of $[0/90]_s$ and $[0/90_3]_s$ GFRP laminates are shown on Fig.3. While Hashin predicts an increase of the Poisson's ratio for a $[0/90]_s$ lay-up and asymptotic decrease to some non-zero value for a $[0/90_3]_s$ lay-up, the Poisson's ratio should decrease almost to zero according to ECM/2-D shear lag approach. For transverse cracking without splitting, the ECM/2-D shear lag approach predicts significantly greater reduction in the Poisson's ratio than Hashin's model [12]. The present model is in excellent agreement with a recently developed variational model [15].

Tsai and Daniel [13] suggested a semi-empirical expression for the shear modulus reduction ratio based on the 'superposition' of solutions for a single set of cracks

$$\frac{G_A}{\hat{G}_A} = \left[1 + \chi \frac{D_1^{mc}}{\lambda_2^{(1,1)}} \tanh \frac{\lambda_1^{(1,1)}}{D_1^{mc}} + \frac{1}{\chi} \frac{D_2^{mc}}{\lambda_2^{(2,2)}} \tanh \frac{\lambda_2^{(2,2)}}{D_2^{mc}} \right]^{-1} \tag{11}$$

The value of the shear modulus reduction ratio calculated in [13] by the finite differences method appeared to be within 1% of the value given by Eqn 11. The present approach, if the interaction between transverse cracks and splits is neglected and $h_s = h_1$, yields a similar expression, but with few additional terms

$$\frac{G_A}{\hat{G}_A} = \left[1 - \frac{D_1^{mc}}{\lambda_2^{(1,1)}} \frac{D_2^{mc}}{\lambda_2^{(2,2)}} \tanh\frac{\lambda_2^{(1,1)}}{D_1^{mc}} \tanh\frac{\lambda_2^{(2,2)}}{D_2^{mc}}\right] \times$$

$$\times \left[1 + \chi \frac{D_1^{mc}}{\lambda_2^{(1,1)}} \tanh\frac{\lambda_2^{(1,1)}}{D_1^{mc}} + \frac{1}{\chi} \frac{D_2^{mc}}{\lambda_2^{(2,2)}} \tanh\frac{\lambda_2^{(2,2)}}{D_2^{mc}} + \frac{D_1^{mc}}{\lambda_2^{(1,1)}} \frac{D_2^{mc}}{\lambda_2^{(2,2)}} \tanh\frac{\lambda_2^{(1,1)}}{D_1^{mc}} \tanh\frac{\lambda_2^{(2,2)}}{D_2^{mc}}\right]^{-1} \quad (12)$$

Interestingly, for transverse cracking without splitting (i.e. $D_1^{mc} = 0$), Eqns 11 and 12 are reduced to the same expression.

Table 2 shows comparison of predictions for the shear modulus reduction ratio of AS4/3501-6 $[0_3/90_3]_s$ transversally cracked and split laminate. In most of cases, predictions based on Eqn 10 [13] are within 10% of those obtained by the present ECM/2-D shear lag approach. However, in some cases the difference can be as big as 20%. Although experimental data acquired in [13] are in acceptable agreement with the authors' predictions [13], further experimental work is required to validate these models.

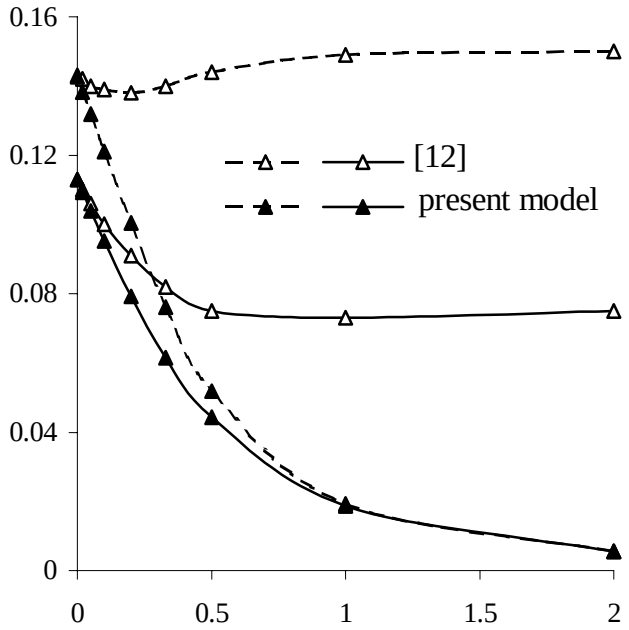

Fig. 3: Poisson's ratio ν_A vs damage parameter $D_1^{mc} = D_2^{mc}$ for [0/90]$_s$ (hatched lines) and [0/90$_3$]$_s$ (solid lines) GFRP laminates

Table 2: Shear modulus reduction ratio

D_1^{mc}	D_2^{mc}	$G_A / \hat{G}_A$		
		[13], Eqn 11	present model, Eqn 12	δ_G, %
0.39	0.	0.788	0.805	2.2
	0.2	0.711	0.706	0.7
	0.4	0.647	0.624	3.6
	0.6	0.596	0.557	6.5
	0.8	0.557	0.503	9.6
0.66	0.	0.692	0.713	2.9
	0.2	0.631	0.613	7.4
	0.4	0.581	0.532	8.4
	0.6	0.540	0.465	13.9
	0.8	0.508	0.410	19.3

NUMERICAL RESULTS

To evaluate the stiffness degradation in cross-ply laminates due to transverse cracking and splitting, two lay-ups were examined: $[0/90]_s$ and $[0/90_3]_s$. The properties of unidirectional materials used in the analysis are taken from [16]. All results given below are obtained taking into account the interaction between transverse cracks and splits. Up to 12 iterations are required to solve the set of simultaneous nonlinear algebraic equations (Eqn 10) with accuracy of 10^{-9}. The number of iterations increases with increasing cracking/splitting density.

The axial modulus $E_A / \hat{E}_A$, shear modulus $G_A / \hat{G}_A$ and Poisson's ratio $\nu_A / \hat{\nu}_A$ reduction ratios of a CFRP $[0/90]_s$ laminate with and without splitting are shown on Fig. 4a as functions of transverse crack density (splitting density 10 cm^{-1}). As one would expect, the axial modulus is almost not affected by splitting. However, splitting causes further reduction in the shear modulus and Poisson's ratio, by approximately 18% and 22%, respectively, for a given splitting density. The effect of splitting, more pronounced on the Poisson's ratio than on the shear modulus, slightly increases with an increase in transverse crack density. Fig. 4b shows analogous predictions for a CFRP $[0/90_3]_s$ laminate. For a given splitting density of 10 cm^{-1}, additional reduction in the shear modulus and Poisson's ratio due to splitting is about 10% and 11%.

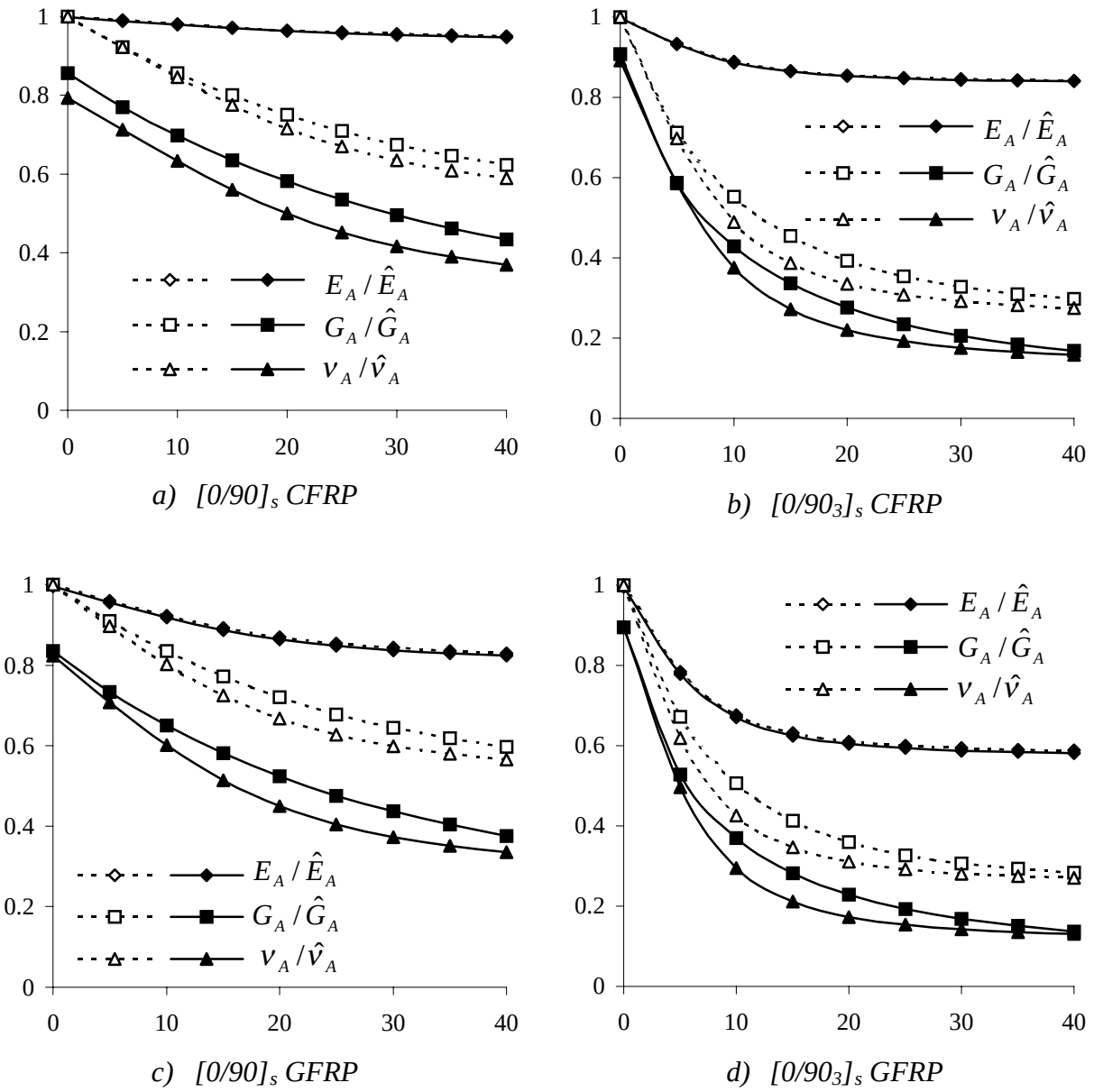

Fig. 4: Elastic moduli reduction ratios vs transverse crack density (cm^{-1}) for laminates with (solid lines) and without (hatched lines) splitting; splitting density 10 cm^{-1}

Predictions for GFRP $[0/90]_s$ and $[0/90_3]_s$ laminates are shown on Figs. 4c and 4d, respectively. Again, there is almost no further reduction in the axial modulus value due to splitting, although reduction due to transverse cracking in GFRP laminates is greater that in CFRP ones.

For the shear modulus and Poisson's ratio, reduction in their values due to splitting is approximately the same, respectively 17–22% and 18–23% in $[0/90]_s$ and 10–15% and 11–14% in $[0/90_3]_s$, for a given splitting density. The effect of splitting is also observed to increase with an increase in the transverse crack density.

CONCLUSIONS

Under biaxial tensile loading, matrix cracking can occur both in the 90° and 0° plies of cross-ply laminates. The few existing theoretical models [11-14] do not describe reduction of all in-plane stiffness components and appear to be complicated enough to allow any further extension, aimed at involving other damage modes, e.g. local delaminations, and their interaction. The new approach to the problem has been developed, based on the Equivalent Constraint Model (ECM) of the damaged laminate [1, 2]. In the ECM, only one layer contains damage explicitly, while all other layers are assumed homogeneous orthotropic with reduced stifness. An improved 2-D shear lag analysis is performed to determine the in-plane microsstresses in the explicitly damaged layers of the two ECM and derive closed-form expressions for the In situ Damage Effective Functions (IDEFs), which characterise reduced stiffness properties of the damaged layers. Interaction between transverse cracking and splitting is taken into account within the new approach, as IDEFs for a given layer are explicit functions of the relative cracking/splitting density associated with that layer and implicit functions of the damage parameter associated with the other layer. The new ECM/2-D shear lag approach is in a very good agreement with the Hashin's variational method [12] for the axial stiffness reduction. For the Poisson's ratio, the two approaches demonstrate significant qualitative and quantitative discrepancy. Comparison with Tsai and Daniel estimation [13] of the shear modulus reduction shows that the two models predict the same trend, though some quantitative discrepancy (10–20%) is observed for certain crack/split density. Unfortunately, there is no reliable experimental data for Poisson's ratio and shear modulus to test all the models. Numerical results for CFRP and GFRP cross-ply laminates reveal that the effect of splitting on the Poisson's ratio is more pronounced than on the shear modulus, and it slightly increases with an increase in the transverse cracking density. The value of the axial modulus E_A value is almost not affected by splitting.

ACKNOWLEDGEMENT

Financial support of this research by the Engineering and Physical Sciences Research Council (EPSRC/GR/L51348) is gratefully acknowledged.

REFERENCES

1. Zhang, J., Fan, J., and Soutis, C., "Analysis of multiple cracking in $[\pm\theta_m/90_n]_s$ composite laminates Part 1: In-plane stiffness properties Part 2: Development of transverse ply cracks", *Composites*, Vol.23, No.5, 1992, pp. 291-304.

2. Fan, J., and Zhang, J., "In-situ damage evolution and micro/macro transition for laminated composites", *Composites Science and Technology*, Vol. 47, 1993, pp. 107-118.

3. McCartney, L.N., "Analytical micromechacnical models for the prediction of multiple cracking in composites", *Journal de Physique IV*, Vol. 3, No. 11, 1993, pp. 1637-1646.

4. Nairn, J.A., Hu, S.F., and Bark J.S., "A critical evaluation of theories for predicting microcracking in composite laminates", *Journal of Materials Science*, Vol. 28, No. 18, 1993, pp. 5099-5111.

5. McCartney, L.N. "Stress transfer mechanics for ply cracks in general symmetric laminates", *NPL Report CMMT(A)50*, 1996.

6. Thomas, D.J. and Wetherhold, R.C., "Modelling the effective elastic behavior of transversally cracked laminated composite", *Transactions ASME. Journal of Engineering for Gas Turbines and Power*, Vol. 120, 1998, pp.191-198.

7. Adolfsson, E., and Gudmundson, P., "Matrix cracking induced stiffness reduction in $[(0_m/90_n/+\theta_p/-\theta_q)_s]_M$ composite laminate", *Composite Engineering*, Vol. 5, No. 1, 1995, pp.107-123.

8. Tong, J., Guild, F.J., Ogin, S.L., and Smith, P.A., "On matrix crack growth in quasi-isotropic laminates - I. Experimental investigation. - II. Finite element analysis", *Composites Science and Technology*, Vol. 57, No. 11, 1997, pp. 1527-1545.

9. Zhang, J., Soutis, C., and Fan, J., "Effects of matrix cracking and hygrothermal stresses on the energy release rate for edge delamination in composite laminates", *Composites*, Vol. 25, No. 1, 1994, pp. 27-35.

10. Zhang, J., Soutis, C., and Fan, J., "Strain energy release rate associated with local delamination in cracked composite laminates", *Composites*, Vol. 25, No. 9, 1994, pp.851-862 .

11. Highsmith, A.L., and Reifsnider, K.L., "Internal load distribution effects during fatigue loading of composite laminates", *ASTM STP 907*, 1986, pp. 233-251.

12. Hashin, Z., "Analysis of orthogonally cracked laminates under tension", *Transactions ASME. Journal of Applied Mechanics*, Vol. 54, 1987, pp. 872-279.

13. Tsai, C.L., and Daniel, I.M., "The behavior of cracked cross-ply laminate under shear loading", *International Journal of Solids and Structures*, Vol. 29, No. 24, 1992, pp. 3251-3267.

14. Henaff-Gardin, C., Lafarie-Frenot, M.C., and Gamby, D., "Doubly periodic matrix cracking in composite laminates Part 1: General in-plane loading Part 2: Thermal biaxial loading", *Composite structures*, Vol. 36, 1996, pp. 113-140.

15. Pagano, N.J., and Schoeppner, G.A., "Some transverse cracking problems in cross-ply laminates", *CTP AIAA/ASME/ASCE/AHS/ASC Structures, Structural Dynamics and Materials Conference 1997*, Vol.3, 1998, pp. 2032-2040.

16. Smith, P.A., and Wood, J.R., "Poisson's ratio as a damage parameter in the static tensile loading of simple cross-ply laminates", *Composites Science and Technology*, Vol.22, 1990, pp. 85-93.