Experimental studies of Impact on Marine Composites

D. Choqueuse, R. Baizeau, P. Davies

Marine Materials Laboratory,

IFREMER, Centre de Brest,

BP70, 29280 Plouzané,

France.

SUMMARY : This paper presents a summary of recent experimental work at IFREMER on impact of structures for marine applications. The aim of this work is primarily to develop test data which will enable predictive methods to be validated, so that in the future the number of expensive tests can be minimized. A second aim is to compare the performance of different materials under impact loading. Three types of impact are discussed. First, falling weight, involving energies up to 3 kJ, and steel impacters weighing up to 50 kg which are dropped onto composite sandwich panels. The second type of test is the simulation of wave impact (slamming) using a 20 kg flexible bladder impacter. The third type is large mass impact and tests involving the release of containers weighing up to 4 tons from heights up to 3 metres onto large steel and composite floor structures are presented. In addition to producing the data necessary for checking models, the results from these studies show that composites possess attractive energy-absorbing mechanisms.

KEYWORDS : Impact, Sandwich, Falling weight, Slamming, Offshore.

INTRODUCTION

Composite materials, particularly in the form of sandwich construction, are very attractive for marine structures where their combinations of low weight and excellent corrosion resistance are finding an increasing number of applications. Dimensionning of these materials for static loading is now quite well established but their resistance to impact loads is not well defined and is usually accounted for by large safety factors. There are exceptions such as underwater explosion where resistance to impact is the primary function of the structure and has been examined in detail. However, when composite solutions are proposed for a structure such as a floating marina or the deck of an offshore platform, the uncertainty over the impact behaviour of these "new" materials prejudices their adoption. When in addition the impact behaviour of the existing (steel) structure cannot be quantified it is difficult to convince potential operators of the reliability of the new concept without expensive demonstration tests. The use of finite element models specifically developed for impact could improve this situation but designers must be confident that these tools produce reliable results, so appropriate impact tests with

adequate instrumentation to compare with numerical predictions are essential. This paper presents results from a number of recent studies in which such tests have been performed.

TYPES OF IMPACT

The structures employed in marine applications range from pleasure boats to frigates and fast ferries, and from marina jetties to offshore production platforms. Such structures may encounter a very wide range of loading conditions. Taking some examples:

- Pleasure boats need tolerance to accidental damage, while ocean-racing yachts require additional wave and floating object (ice) resistance
- A fast passenger ferry might require resistance to accidental dropped object damage on the deck, floating object impact at 40 knots, repeated wave impact (slamming), and even to collision with port structures or other ships.
- A minesweeper would need all these in addition to its primary function of resisting underwater explosion.
- Offshore platform structures require different levels of impact resistance according to the utilization of the different zones, storage, accomodation, helidecks, production etc.

Given such a bewildering variety of situations which might be encountered, the designer of marine structures has in the past been obliged to rely on static dimensionning and large safety factors. This approach is slowly changing as sophisticated numerical models are being developed. The reliability of such models can only be established by confronting their predictions with results from realistic tests. In most cases such test data simply does not exist, and even when tests are described in the published literature essential values are often missing so that it is impossible to run benchmark tests.

PREVIOUS WORK

There have been many previous studies on impact of composites, some of which are relevant to the work presented here. Iimpact behaviour of composites has been widely studied in the aeronautical industry and several recent reviews are available [1-3]. The composite materials used for marine applications differ significantly from aerospace materials, being based on low volume fractions of glass fibres (rather than high fractions of carbon), manufactured by hand lay up or other low cost methods (rather than from prepreg) and not being subjected to elevated temperature cure cycles. In general the impact energies applied in the aerospace studies range from a few Joules to about 100 Joules, to simulate damage caused by a dropped tool, and the damage criterion of interest is usually visible impact damage. Some higher energy impact studies have been presented. For example Nilsen dropped impacters weighing over 50 kg onto 600 x 600 mm^2 foam core sandwich panels [4] while Mines et al. used 20 kg dropped weights [5]. The effect of a slamming type of impact was studied by Reichard [6], using a drop weight arrangement in which the panel to be tested was placed on a water bladder. Larger scale tests on metal and composite structures were performed at DNV in Norway [7,8]. Instrumented V-sections were dropped from heights up to 10 meters onto water. Other impact tests on composites, involving oblique angle drop weight impact and repeated load pulses to simulate slamming have also been reported [8,9].

MATERIALS STUDIED

A number of materials have been tested in the work described here and some details of these are given in Table 1.

Material	Thickness	Geometries tested (mm)	Type of test
GRP/PVC foam sandwich	Facings 2mm Core 20mm	300 x 300 up to 800 x 800	Drop weight and Slamming
GRP/Phenolic foam sandwich	Facings 2mm Core 50 mm	2000 x 1000 4000 x 5000	Drop weight and Container
CFRP Stiffened laminate & Sandwich (foam, honeycomb)	Laminate: 5 mm Sandwich: Facing 1mm Core 20-35 mm	1200 x 600	Slamming
Pultruded box sections	Thickness 7 to 15mm (Section 250 x 300)	Single 5m element 14 elements	Drop weight and Container
Acier E24 78 kg/m²	9 mm 6 mm	2000 x 1000 4000 x 5000	Drop weight and Container

Table 1. Materials used in the tests described in this paper.

They range from lightweight honeycomb and PVC foam core sandwich panels for boats to heavier structures for offshore applications designed primarily to withstand fire tests at over 1000°C. Even the pultruded section, nominally heavier than steel, can provide a net weight gain as its high stiffness requires less supports than conventional deck structures.

EXPERIMENTAL STUDIES

Falling weight up to 3kJ

This type of impact is the most convenient for laboratory testing. The falling weight tower employed here is 6 metres high and masses of up to 50kg can be used. An instrumented impacter allows the determination of contact force, and laser transducers and diodes record displacement and speed. Data are recorded and stored by a high speed acquisition system (up to 250 kHz). This set-up has been described in more detail elsewhere [10]. Two examples of recent studies will be described.

In the first, panels of laminates and 80 kg/m^3 PVC foam core sandwich with glass reinforced polyester facings were tested in order to provide experimental data for correlation with both finite element and analytical models [10-12] An experimental study based on Response Surface methodology (using the Taguchi method) has also been used recently to evaluate the influence of the different impact parameters (mass, speed and specimen span) on sandwich damage [13-15]. These are quite straightforward tests, performed on panels of up to 800 x 800 mm², and the significance of the results lies more in their usefulness in validating the models proposed than in the tests themselves. They will not be discussed in detail here, but in many cases excellent correlations are obtained between predictions and measurements. Figure 1 shows result of central displacements calculated by different finite element codes. There are considerable differences in predicted values but some codes do give very good agreement with test results.

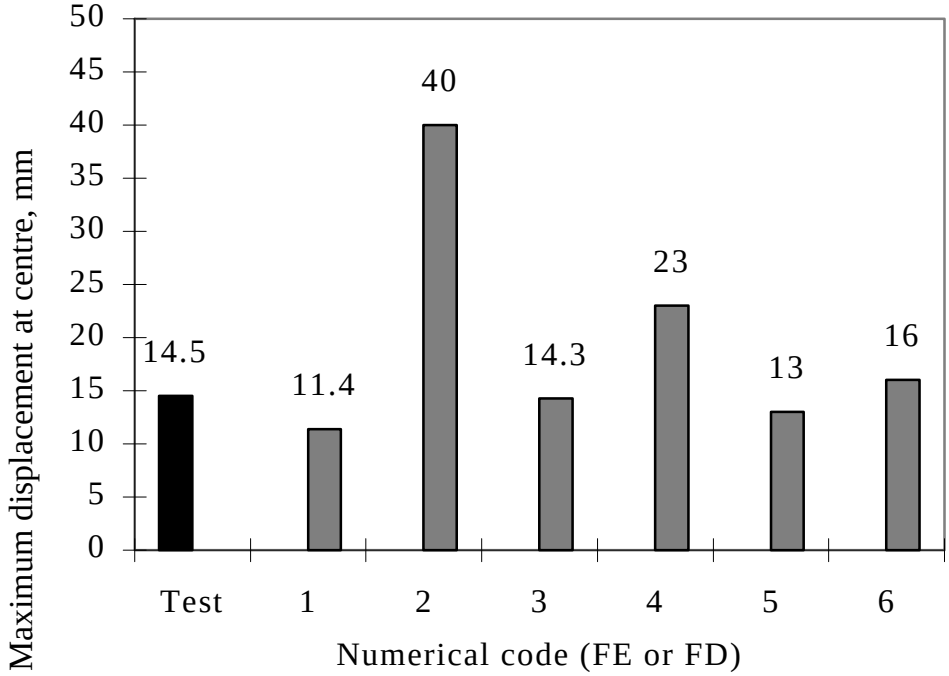

Fig. 1 : Comparison of Finite Element (FE) or Finite Difference (FD) predictions using different codes with measured values of central lower facing displacement, GRP/PVC core sandwich 75 J impact, (numbers indicate displacements in mm).

The second example is that of composite materials for fire resistant applications, particularly offshore. Here the test requirement was for a 5 kg weight to be dropped from a height of over 5 meters and residual stiffness was measured. Two types of impacter were used, pointed and hemispherical, and both clamped and simply supported loading conditions were examined. Three materials were studied, 9 mm thick steel (the reference material currently used for offshore deck structures), phenolic sandwich panels and pultruded box sections. The panel materials were loaded before and after impact on a 100 ton capacity static pressure test bed described elsewhere [16] to determine the influence of different impact energies on their stiffness.

Simulation of wave impact (slamming)

This second study concerns the optimization of the design of racing yacht structures. These are high performance craft destined for trans-atlantic and round-the-world races (Route du Rhum, BOC challenge, Globe challenge, ...), Figure 2a. Both multihull and monohull are used and their structures are manufactured exclusively from composite materials. Low weight, high rigidity and very good resistance to impact are required. The most critical types of impact on the hull are slamming (repeated transient water pressure) and collision with floating ice (‘growlers’). In recent races such impacts have caused serious damage, as the ever-increasing stiffness of the hull structure is accompanied by a low energy-absorption capacity. The exact loading generated by these impacts is very difficult to determine. For slamming loads some models have been proposed [17], but they need to be validated and the calculations needed to integrate these models into design are very time-consuming and costly. For impact with floating objects, modelling is even more difficult. The design solutions chosen by naval architects differ widely, as a large number of parameters can be varied : choice of material

(monolithic or sandwich material), stiffness of the panels, type and location of stiffening, ... At present the optimization of such structures to resist these impacts is therefore largely empirical. In order to enable a more rational approach to this selection procedure from the different material and structural solutions available, several series of tests have been performed recently, and these are summarized below.

Fig 2 : Ocean racing yatch structures
(a) Racing monohull "PRB"
(b) Panels for slamming tests

The form of these boats is primarily governed by hydrodynamic considerations, and once these have been established then the boatyard and the designer must choose the structure in order to obtain stiffer and lighter boats. For the hull two options were proposed here, sandwich panels

or monolithic panels with extra longitudinal reinforcement,.(Figure 2b),with the distance between transverse stiffeners in the range 750 to 1000 mm. Concerning the materials for the monolithic sandwich panel constructions, the choice is very wide and mainly concerns the fibre reinforcement, (glass, (E, R or S), hybrid carbon-Kevlar or different types of carbon fibres (T300J, T700, T800). In addition for the sandwich panel the choice concerns the type, the density and the thickness of the core. PVC (linear or crosslinked from 80 to 130 kg/m^3), aluminium honeycomb from 64 to 128 kg/m^3, and Nomex from 48 to 96 kg/m^3 are all considered. The thickness of the core varies from 20 to 35 mm.

The main problem was to simulate as simply as possible the slamming impact. Full scale tests are not possible, and dropping dummy structures onto water [7] is not compatible with a rapid evaluation. The approach employed was first to study the types of damage which were observed on hull structures during previous races (shear core failure, disbonding of stiffeners with no local indentation). The area damaged is generally limited to a circle of about 20 cm diameter. From this observation, and after some preliminary trials it was decided to perform drop weight tests onto representative panel elements, of a size to include a minimum of one frame of transverse stiffening (1000 mm by 500 mm). Different types of impactors were used initially in order to induce damage similar to that seen in practice. Rigid impactors, and a range of flexible bladders filled with different materials were evaluated. The best results were obtained from an elastomeric ball (diameter 30 cm) filled with sand to a total weight of 20kg. The damage introduced by this impacter was observed to be representative of the damage encountered on real structures.

The test consists of dropping the impacter from different heights (from 50 cm up to 8 meters) onto the centre of the panels. As for the rigid impact tests described above considerable instrumentation was used, both to measure and compare the behaviour of the panels and to provide data for subsequent modelling. Strains from gauges at the panel centre, non-contact displacement measurement of the central deflection, and loads at the reaction points (under the stiffeners) have all been measured using rapid data acquisition systems (acquisition frequency up to 250 kHz). In order to analyse the behaviour of the panel during the impact a high speed video camera has also been used.

The evaluation of the damage of this kind of panel is not simple, as common NDT methods are of limited use. The most useful evaluation of the damage is performed by determining the reduction in stiffness of the panel, using the uniformly-distributed pressure loading test bed described above.

More than 20 different panel designs have been tested in three series of tests. Some example of curves obtained during the test are presented in Figure 3, showing the central strain versus time as a function of drop height. The impact duration is reduced and strain increases with increasing height and some dynamic effects are noted. At 6 meters drop height there is a change in response and when the residual rigidity is measured, a significant loss in stiffness is noted. This is due to extensive debonding between the core and the upper skin of the sandwich.

These tests yield information on the resistance of different material combinations to a slamming-type impact and on the level of critical strains corresponding to damage initiation. In addition they provide data for the validation of simple analytical models which may in the future lead to a more rational design philosophy for these applications.

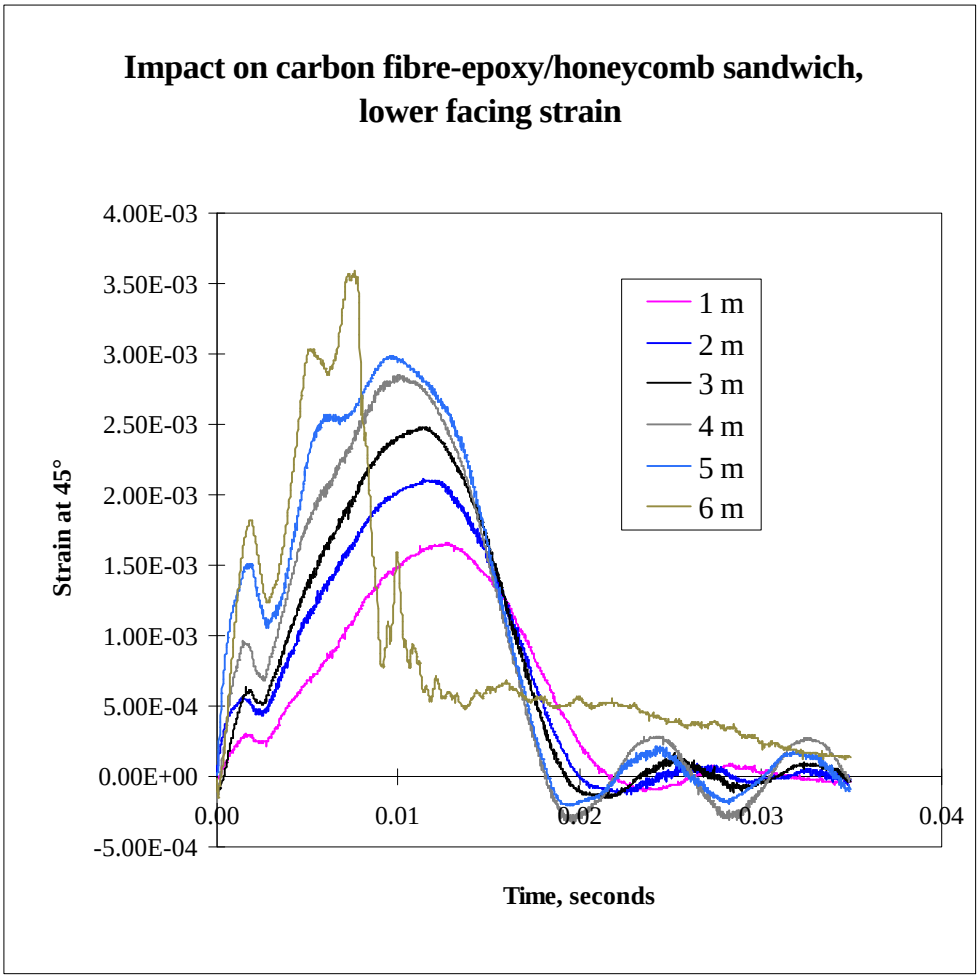

Fig. 3 : Examples of results from slamming test on sandwich panel.
Strain at centre of lower facing as a function of impact drop height. 20 kg flexible impacter, carbon-epoxy/Nomex sandwich panel.

High energy, container drop tests

A French group, linking oil companies, composite manufacturers, engineering companies, a certification authority, and technical centres, has been studying the use of composite materials for offshore installations in order to limit the topside weight. The advantages of composites for such applications have been described elsewhere [18]. The present study concerns the substitution of steel floor panels by composite materials. The fire resistance of these structures, is the first criterion for selection, and once this has been satisfied the impact behaviour must be considered. Demonstration studies are requested by engineering companies and certification authorities and these involve the comparison of the behaviour of the composite solution with that of the existing steel structure. Tests were performed on representative scale structures i.e. a 5m by 4m panel corresponding to a typical area in use on offshore structures. The criterion for qualification with respect to impact behaviour corresponds to the capacity of these structures to resist a 4 ton container dropped from a height of 3 metres without letting the container pass through. Two composite material solutions have been compared to a steel solution. The latter is made from 6 mm thick steel plate reinforced by welding of I-section longitudinal stiffeners with 1 metre spacing. The composites considered are those described in Table 1, which were tested at reduced scale (tests described in section above). The first composite flooring solution consists of an assembly of fourteen 5 metre long, pultruded profiles made of E glass fibre reinforcement in modified acrylic resin. The section of these

profiles is 300 mm by 280 mm. The second composite solution consists of assemblies of five 900 mm by 400 mm modules. These modules are made by assembling of sandwich panels, which are obtained by lamination of glass/phenolic resin skins on a phenolic syntactic foam core.

The containers which served as impacters are metallic, with 9 m^3 of usable volume, of cubic shape and equipped with standard ISO corners. Their empty weight is 0.8 tons and they have been filled with sand for the test in order to increase the weight up to 1 ton and 4 tons.

The boundary conditions were defined in order to be both as realistic as possible, compared to the real application, and to allow as many tests as possible to be performed (minimizing the time necessary to change floor structures). The floors were placed on two 12 metre long metallic beams, (600 mm I-beams), similar to the beam used to build the general frame of an offshore installation, Figure 4. The containers were held by one corner and then dropped onto the centre of the floor. For the steel floor, both 4 metre long and 5 metre long structures have been tested in order to impact at the centre either directly onto a stiffener or onto the middle of the steel plate welded on the stiffeners.

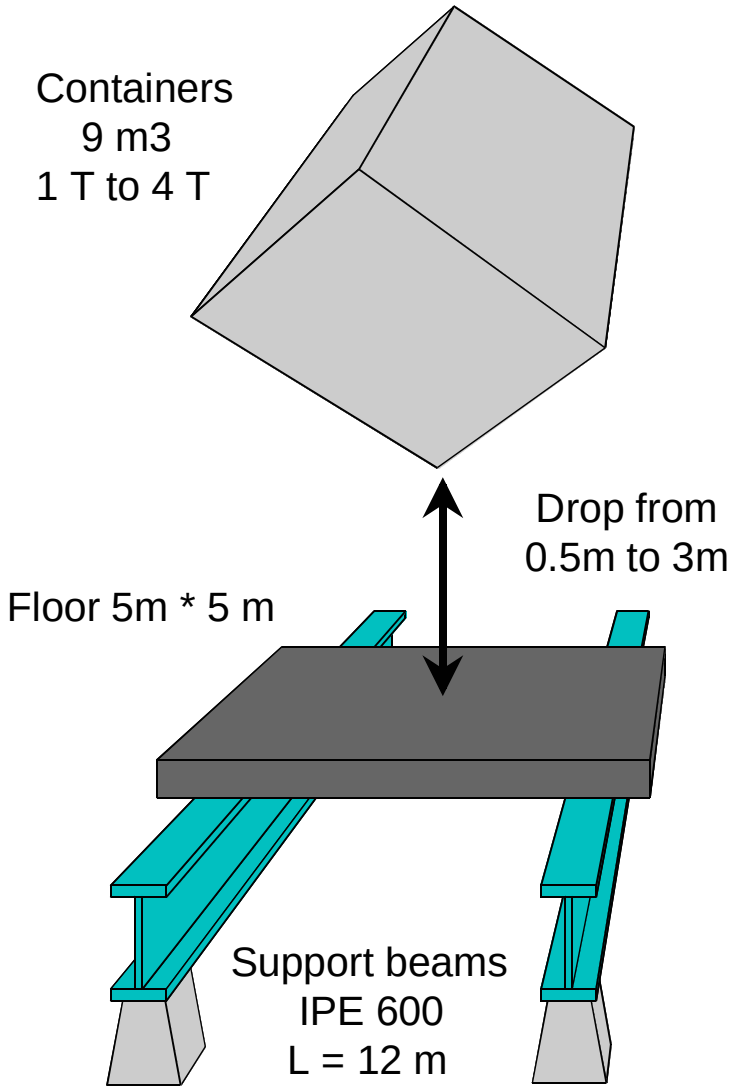

Fig 4 : Schematic illustration of test set-up for container drop tests.

Extensive instrumentation has been deployed in order to record a maximum amount of information during the impact event. Load cells placed under the four reaction points allow the force to be measured during the impact. Displacement transducers at two points give access to

the global movement of the floor and the support beams. Accelerometers placed on the containers and the floors, and strain gauges (4) bonded to the floors and supports beams were also used. A high speed data recording system (acquisition frequency of 50 kHz per channel) and video and high speed video cameras (1000 images/second) completed the instrumentation.
Thirteen tests were performed : nine on four different steel floors and four on the two composite floors. The force-time plots from this test, together with plots from the 120 kJ tests on the steel stiffener and on the pultruded composite floor are shown in Figure 5.

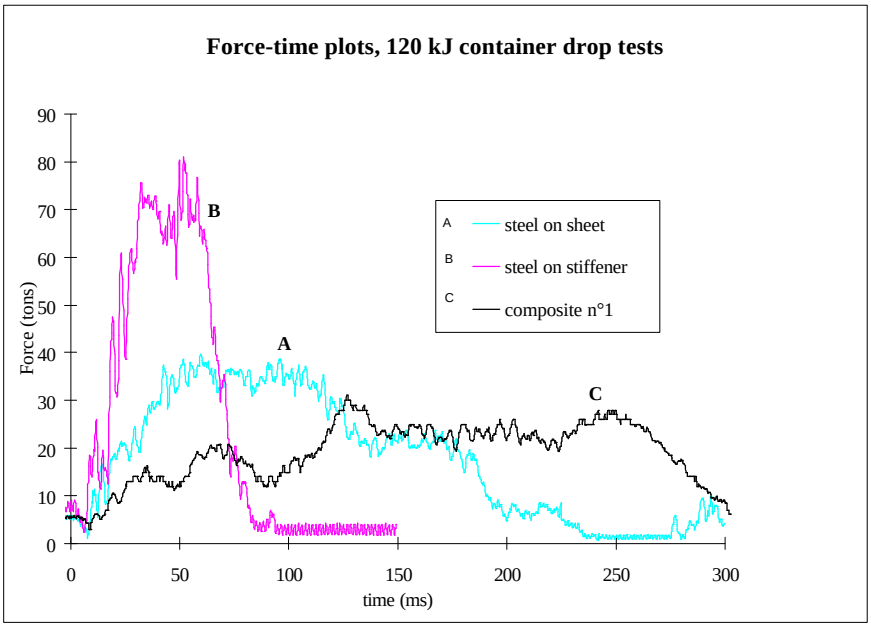

Fig. 5 : Force v time plots recorded during 120 kJ container drop tests on steel and pultruded composite floors

Concerning the qualification criterion, this is based on the test in which the 4 ton container is dropped from 3 meters.The steel floor passed this test, as did one composite floor (the pultruded sections). Significant damage was observed in both cases, but it was still possible to walk across the floors after impact, and the modular design of the pultruded composite floor allowed easy replacement of the damaged elements.
These large scale tests served primarily as a demonstration of the feasibility of using composite materials for floor structures on offshore installations. The impact behaviour of the pultruded composite structure was shown to satisfy the qualification criterion specified. It is not possible in limited space here to detail the results, more data will be presented elsewhere [19], but a considerable amount of data has been generated which is available to correlate with calculations.

CONCLUSIONS

This paper has presented a number of examples of impact tests performed recently for marine applications ranging from the hulls of ocean racing yachts to the topside decks of offshore platforms. A common aspect to all these cases is the effort made to instrument tests. This has resulted in the establishment of a database of valuable information, which is serving both to improve our understanding of the response of these structures to dynamic loading, and also in evaluating the usefulness of theoretical models. The role of experimental studies is essential to the optimization of these structures for marine applications, but the focus of these studies must be directed towards validation of modelling techniques. The diversity of loading situations,

materials and structures is such that future optimization will be based on the exploitation of these techniques.
Nevertheless a significant experimental effort is still required to characterize the properties of the different materials with respect to loading rate. Reliable property values, particularly defining failure, are needed for modelling. Scale effects in such tests must also be correctly accounted for, and these aspects are the subject of continuing work..

Acknowledgements.

The authors acknowledge the contributions to these studies of colleagues at IFREMER, J. Croquette, L. Lemoine, L. Riou, M. Peleau, H. Loaec, D. Petton and M. Conte, and the collaborations with P. Parneix of DCN Lorient, Pascal Conq of 'Finot', Hervé Devaux of HDS and with members of the CLAROM group (Club pour les actions de recherche sur les ouvrages en mer). Thank also to "Seven Seas" for the photograph of PRB (I.Autissier) in Figure 2.

REFERENCES

[1] Abrate S, Applied Mechanics Review, 44, 1991, pp155-190.
[2] Cantwell WJ, Morton J, Composites, 22, 1991 pp347-62.
[3] Olsson R, Impact response of composite laminates, FFA report no. TN1992-33, 1992.
[4] Nilsen PE, Moan T, Gustafson C-G, Proc. 2nd Int. Conf. on Sandwich Constructions, Florida, 1992.
[5] Mines RAW, Worrall CM, Gibson AG, Proc I. Mech. Eng, C400/038, 1990 pp149-155.
[6] Reichard R, Proc. FAST 91, Trondheim, Norway, pp 399-411.
[7] Hayman B, Haug T, Valsgard S, Proc. FAST 91, Trondheim, Norway, pp381-98
[8] Echtermeyer AT, Pinzelli RF, Raybould KB, Skomedal N, DNV Research paper 94-P204, presented at SAMPE conference, Toulouse June 1994.
[9] Buene L, Echtermeyer AT, Hayman B, Sund OE, Engh B, DNV Research paper 92-P001, presented at. 2nd Sandwich Construction conference, Florida March 1992.
[10] Davies P, Choqueuse D, Verniolle P, Prevosto M, Genin D, Hamelin P, in 'Impact and Dynamic fracture of Polymers and Composites', ESIS 19, 1995, MEP, London pp341-58.
[11] Davies P, Choqueuse D, Bigourdan B, Proc. Sandwich Constructions 3, 1996, EMAS, pp647-658.
[12] Wahab A, PhD thesis ENSAM Bordeaux, February 1997 (in French).
[13] Pecault S, PhD thesis ENSAM Bordeaux, December 1996 (in French).
[14] Pecault S, Collombet F, Lataillade JL, Davies P, Choqueuse D, Proc. Euromech 360 'Mechanics of Sandwich Structures', St Etienne May 1997
[15]. Nemes JA, Simmonds KE, J. Comp. Mats., 26, 1992, pp500-519.
[16] Davies P, Choqueuse Bigourdan B, Marine Structures, 7, 1994 pp345-363
[17] SNAME Tech. Research bulletin 1985, 2-28.
[18] Gibson AG, Chapter 3 in 'Composite materials in Maritime Structures', ed Shenoi & Wellicome, Cambridge Ocean Technology series, 1993
[19] Croquette J et al., To be presented at International conference on Composite Materials for Offshore operations, Houston, October 1997.