RESEARCH AND DEVELOPMENT OF SMART GIANT MAGNETOSTRICTION COMPOSITE MATERIALS USING POWDER METALLURGIC TECHNOLOGY AND THEIR APPLICATIONS TO ADVANCED DEVICES

H. Eda [1], Y. Tomita [1], T. Mori [2], Y. Okada [3], J. Shimizu [1] and L. Zhou [1]

[1] *Department of Systems Engineering, Faculty of Engineering, Ibaraki University*
12-1, Nakanaruswa, 4-chome, Hitachi-shi, 316-8511, Japan
[2] *Material Research Center, TDK Corporation*
570-2Matsugashita, Minamihatori, Narita-shi, 286-8588, Japan
[3] *Department of Mechanical Engineering, Faculty of Engineering, Ibaraki University*
12-1, Nakanaruswa, 4-chome, Hitachi-shi, 316-8511, Japan

SUMMARY: Powder metallurgic giant magnetostrictive composite materials (GMM) which are special kind of metallic compounds have a wide range of application possibilities. These materials have a homogeneous structure, low internal stresses and low cost, which make them able to create magnetostrictive elements. Therefore, GMM can be used to develop positioning as well as vibration actuators with quick response and good repeatability. It is believed that the high power and torque developed by these materials in addition to the wide frequency range and applications as sensors will open new possibilities for device designers and engineers. This research realizes those possibilities of smart anisotropic powder metallurgic giant magnetostrictive composite materials and confirms those properties by putting them to work in high output as a vibration suppression device equipped with smart GMM actuators for the space structure is reported.

KEYWORDS: giant magnetostriction composite materials, powder metallurgy, rare-earth alloys, actuator, vibration suppression control system, space-use actuator

INTRODUCTION

Conversion of electrical energy to mechanical energy in the presence of a magnetic field is the phenomenon of magnetostriction. Elongation or change in the structure of a magnetostrictive material is a function of the applied magnetic field. This elongation is in turn a function of materials crystal structure. Force that accompanies the elongation as the external magnetic field is applied as a function of elastic energy, magnetoelastic energy, magnetrons directional energy, spin moment energy of the magnetrons and the phase and crystalline orientation of the magnetostrictive material. The change in the physical shape of the magnetostrictive rod is dependent on all these factors. These factors are dependent on the construction of the atomic vacancies, spin magnetic moment and the orbital magnetic moment.

Temperature variations have a disturbing effect on the properties of the magnetic materials. It is possible to adjust the composition ratio of elements used to produced giant magnetostrictive

materials [1]. Depending on the application requirement stoichiometry can be customized. These materials provide excellent temperature stability. We have developed a technique where a mixture of three different pulverized ingot is blended, compressed and shaped in the presence of the magnetic field. The formed material is then sintered which causes diffusion of the elements resulting in a polycrystalline magnetostrictive material. The resulting material has megnetostriction due to [111] axis orientation, appropriate crystalline magnetic anisotropy and good response to magnetic field.

In this article, development of vibration suppression device equipped with giant magnetostriction actuators for the space structure is examined. Simulation model of the control target and control system is proposed and experiment of vibration control is performed. From the simulation and experimental results, possibility of the fast vibration suppression is confirmed.

BACKGROUND [2]

Figure 1 indicates the importance of the presence of an interface which connects a macro-world and a micro-world. The interface is mainly composed of actuators, sensors and micro-computers, as shown in Fig. 2. It enables users to feel microscopic phenomenon as if they do in the micro-world.

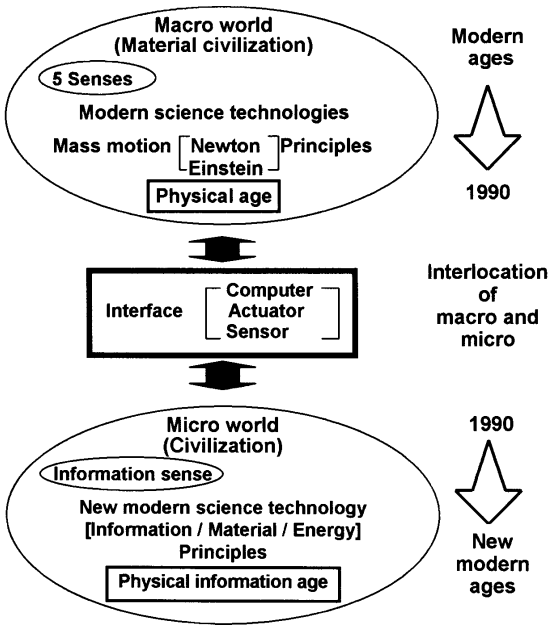

Fig.1: The world of the new generation

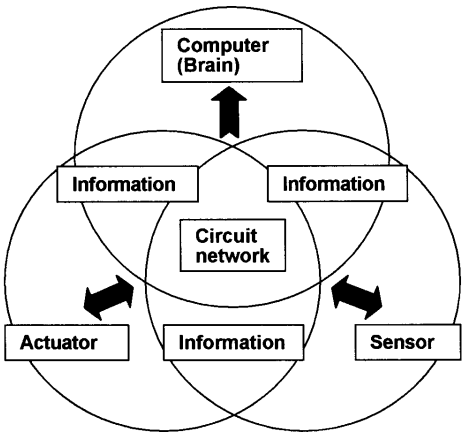

Fig.2: A body infusion uniting actuator, sensor and computer

Recently life science and biological systems have been approached from engineering viewpoints in order to apply functionality and structures observed at atomic or molecular level in organisms to engineering problems. To achieve this, development of new devices and materials, which are able to realize the required functions and movements at microscopic level, becomes mandatory. For instance, large power output, large displacement and quick response will be required for functions, while safety, stable operation and flexibility will be primary concern as far as structures are concerned. A gap between macro-world and micro-world needs to be shortened in a natural manner by utilizing advanced devices and materials. In these aspects, it is believed that giant magnetostrictive material is one of the most promising materials to satisfy such requirements.

Figure 3 illustrates how things in the macro-world evolve by means of the fusion of actuators, sensors and components.

POWDER METALLURGY METHOD AND SMART ANISOTROPIC GIANT MAGNETOSTRICTION MATERIALS

We have developed a technique where a mixture of three different pulverized ingot is blended, compressed and shaped in the magnetic field. Three different composite materials are adjusted as follows;

Alloy 1: $Tb_{0.4}\ Dy_{0.6}\ Fe_{1.95} + R_2O_3 + R_2C$

Alloy 2: $Dy_2\ (Fe_{0.2}\ Co_{0.5}\ ) + R_2O_3 + R_2C$

Raw material: $Fe + Fe_2O_3$

where, R = Dy, Tb, T = Co, Fe.

The Developed structure was obtained in form of; $Tb_{0.3}\ Dy_{0.7}\ (Fe_{1.85}Co_{0.06})$. Furthermore, sintering conditions were performed with the average powder grain size of composite materials = 14 μm (in case of milling 30 – 50 μm), forming sinter pressure = 6 - 12 t/cm^2, press-forming under magnetic field = 96 kA/m, 0.6 MPa, sintering temperature = 1180 ^{o}C x 1 - 3 hr in argon gas flow rate 2 *l*/min and annealing temperature 900 ^{o}C / hr.

Figure 4 illustrates a flow chart of fabrication processes of GMM, where (a) is Bridgman method and (b) is powder metallurgy method.

Figure 5 depicts an example of the λ-H curve with different bias load of the developed smart composite material by both powder metallurgy and Bridgman methods. The formed material is then

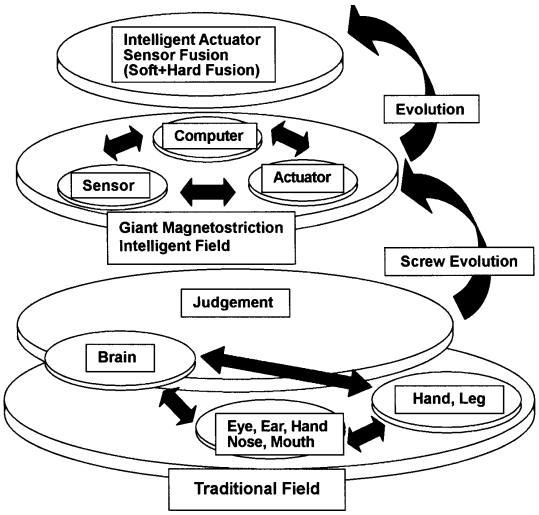

Fig.3: Evolution process in dynamical intelligent system using giant magnetostriction

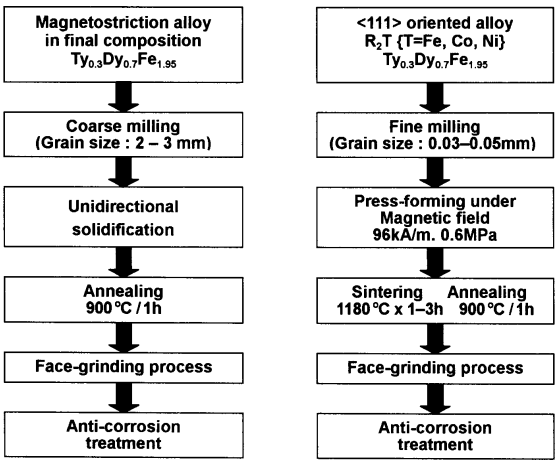

(a) Bridgman method (b) powder metallurgy method

Fig.4: Fabrication processes of Bridgman method and powder metallurgy method

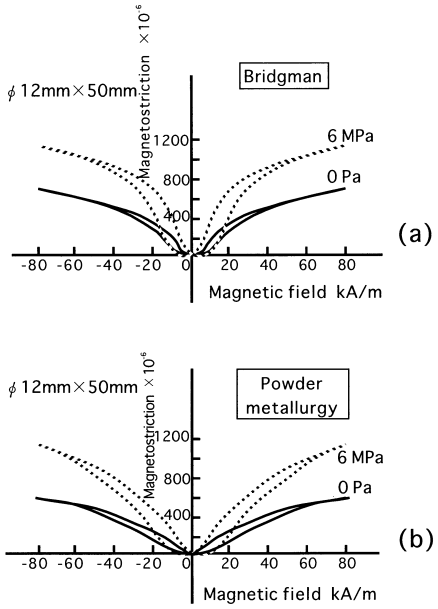

Fig.5: λ-H curves of $Tb_{0.3}Dy_{0.7}(Fe_{1.85}Co_{0.06})$ composite compound developed by Bridgman (a) and powder metallurgy (b) methods.

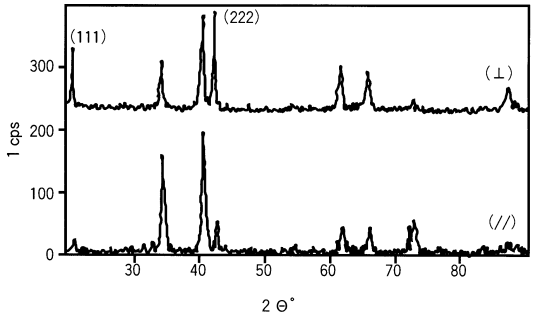

Fig.6: X-rays diffraction pattern of powder metallurgy GMM

sintered and by reason of the diffusion of the elements its final form is in a polycrystalline magnetostrictive material. The resulting material has a magnetostriction property due to [111] axis orientation, appropriate crystalline magnetic anisotropy and good response to magnetic field.

Figure 6 illustrates the X ray diffraction pattern of $Tb_{0.3}Dy_{0.7}(Fe_{1.85}Co_{0.6})$ element sintered in the magnetic field under pressure by powder metallurgy method. The crystal is orientated to the direction of <111>.

VIBRATION SUPPRESSION DEVICE USING POWDER METALLURGIC GIANT MAGNETOSTRICTIVE MATERIAL - APPLICATION -

The powder metallurgic giant magnetostrictive material (GMM) is characterized by high power, large displacement, fast response as well as safety, long lives and flexibility, which are often required by the aerospace structure. As one application of the giant magnetostrictive actuator, the vibration suppression for the aerospace structure has been explored. Described below is the design, simulation, the prototype development and simple suppression experiments.

DESIGN OF THE SUPPRESSION MODEL

FEM is here used to study the dynamic characteristic of the control object and to design the control system. It is however difficult to fully express the characteristics of the control object at high frequency band. H∞ robust control theory is then applied into the design of the controller.

Control Model

For the simplicity, the object is approximated into a model with two degrees of freedom shown in Fig. 7. The base part is free in gradient, while the tip mass is allowed to move horizontally. The base and the tip mass are connected by a rigid beam, and the dynamic characteristics of the beam is not considered. The tip mass is idealized to a material particle and its gradient is ignored. In this model, the resonance mode appears only up to the secondary order. The modes of higher order are treated as the structural variation of the control object and the robust stabilization is applied with H∞ control theory.

When θ_b is defined as the base gradient and x_m is as horizontal displacement of the tip mass, the motion equation of the base part at θ_b direction is given as;

$$J_b\ddot{\theta}_b = -M_0 + T - k_a\theta_b \qquad (1)$$

Where, J is the inertia moment of the base, T is the torque generated by the actuator, M_0 is the moment working on the root part of the beam and k_a is the rigidity of the actuator.

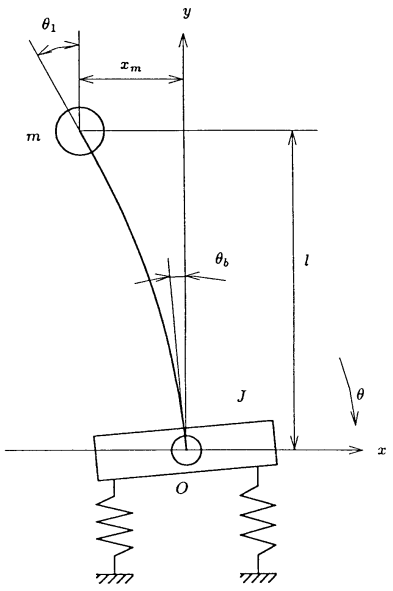

Fig. 7: Schematic drawing of 2-DOF vibration model

The motion equation of the tip mass at x_m direction is express as;

$$m\ddot{x}_m = -F_1 \tag{2}$$

where, m is the mass, F_1 is the force component at x direction. When the displacements of the root and tip of the beam at x direction, and their gradients in respect to y axis are respectively defined as $x_0, \theta_0, x_1, \theta_1$, the force components at x direction and moments acting on the tip and root of the beam (F_0, M_0, F_1, M_1) can be expressed by the matrix of;

$$\begin{bmatrix} F_0 \\ M_0 \\ F_1 \\ M_1 \end{bmatrix} = \begin{bmatrix} k_{11} & k_{12} & k_{13} & k_{14} \\ k_{21} & k_{22} & k_{23} & k_{24} \\ k_{31} & k_{32} & k_{33} & k_{34} \\ k_{41} & k_{42} & k_{43} & k_{44} \end{bmatrix} \begin{bmatrix} x_0 \\ \theta_0 \\ x_1 \\ \theta_1 \end{bmatrix} \tag{3}$$

where k_{ij} is the rigidity of each element and given as follows.

$$k = \begin{bmatrix} 12EI/l^3 & 6EI/l^2 & -12EI/l^3 & 6EI/l^2 \\ 6EI/l^2 & 4EI/l & -6EI/l^2 & 2EI/l \\ -12EI/l^3 & -6EI/l^2 & -12EI/l^3 & -6EI/l^2 \\ 6EI/l^2 & 2EI/l & -6EI/l^2 & 4EI/l \end{bmatrix} \tag{4}$$

where, E is the Young modulus of the beam, I is 2nd moment of area of the beam, and l is the length of the beam.

Since $M_1 = 0$, $x_1 = x_m$ at the tip of the beam, and $x_0 = 0$, $\theta_0 = \theta_b$ at the root of the beam, θ_1 is given as;

$$\theta_1 = -\frac{k_{42}}{k_{44}}\theta_b - \frac{k_{43}}{k_{44}}x_m \tag{5}$$

Thus, it is able to calculate the moment M_0 working at the base and the force component F_1 working at the tip as follows;

$$M_0 = k_{22}\theta_b + k_{23}x_m + k_{24}\theta_b = \left(k_{22} - k_{24}\frac{k_{42}}{k_{44}}\right)\theta_b + \left(k_{23} - k_{24}\frac{k_{43}}{k_{44}}\right)x_m \tag{6}$$

$$F_1 = k_{32}\theta_b + k_{33}x_1 + k_{34}\theta_1 = \left(k_{32} - k_{34}\frac{k_{42}}{k_{44}}\right)\theta_b + \left(k_{33} - k_{34}\frac{k_{43}}{k_{44}}\right)x_m \tag{7}$$

Therefore, the motion equations result in;

$$J_b\ddot{\theta}_b = -\left(k_{22} - k_{24}\frac{k_{42}}{k_{44}} + k_a\right)\theta_b - \left(k_{23} - k_{24}\frac{k_{43}}{k_{44}}\right)x_m + T \tag{8}$$

$$m\ddot{x}_m = -\left(k_{32} - k_{34}\frac{k_{42}}{k_{44}}\right)\theta_b - \left(k_{33} - k_{34}\frac{k_{43}}{k_{44}}\right)x_m \tag{9}$$

when the quantity of state is made as $x = \begin{bmatrix} \theta_b & \dot{\theta}_b & x_m & \dot{x}_m \end{bmatrix}^T$, the state equation is given as.

$$\begin{aligned} \dot{x} &= A_p x + B_p u \\ y &= C_p x + D_p u \end{aligned} \tag{10}$$

$$A_p = \begin{bmatrix} 0 & 1 & 0 & 0 \\ -(k_{22} - k_{42}k_{24}/k_{44} + k_a)/J & 0 & -(k_{23} - k_{43}k_{24}/k_{44})/J & 0 \\ 0 & 0 & 0 & 1 \\ -(k_{32} - k_{43}k_{24}/k_{44})/m & 0 & -(k_{33} - k_{34}k_{43}/k_{44})/m & 0 \end{bmatrix}, \quad B_p = \begin{bmatrix} 0 \\ 1/J \\ 0 \\ 0 \end{bmatrix},$$

$$C_p = \begin{bmatrix} 1 & 0 & 0 & 0 \\ 0 & 0 & 1 & 0 \end{bmatrix}, \quad D_p = 0$$

Each parameter used is listed in table 2.

Controller design

The following points are taken into the consideration for the design of the controller.

To control the resonant vibration of 1st and 2nd mode

To control the instability at higher resonance mode

Taking W_S (weight for control performance), W_T as the multiplicative fluctuation weights at the input side, the plant is generalized as shown in Fig. 8. Here the w_1 is the external force and w_2 is the sensor noise. The state equation of the plant is as;

$$\begin{aligned} \dot{x} &= A_p x + B_p (w_1 + u) \\ y &= C_p x + D_w w_2 \end{aligned} \tag{11}$$

Here, D_w is the weight of the disturbance, which is added to meet the condition for solving the H∞ standard problem,

$$D_w = \begin{bmatrix} 1\times10^{-4} & 0 \\ 0 & 1\times10^{-5} \end{bmatrix} \tag{12}$$

When the weights W_S , W_T respectively take value of;

$$W_S = \left[\begin{array}{c|c} A_S & B_S \\ \hline C_S & D_S \end{array}\right] \qquad W_T = \left[\begin{array}{c|c} A_T & B_T \\ \hline C_T & D_T \end{array}\right]$$

the generalized plant is given as;

$$G(s) = \left[\begin{array}{c|cc} A & B_1 & B_2 \\ \hline C_1 & D_{11} & D_{12} \\ C_2 & D_{21} & D_{22} \end{array}\right] = \left[\begin{array}{ccc|ccc} A_S & 0 & B_S C_p & 0 & B_S D_w & 0 \\ 0 & A_T & 0 & 0 & 0 & B_T \\ 0 & 0 & A_p & B_p & 0 & B_p \\ \hline C_S & 0 & D_S C_p & 0 & D_S D_w & 0 \\ 0 & C_T & 0 & 0 & 0 & D_T \\ 0 & 0 & C_p & 0 & D_w & 0 \end{array}\right] \tag{13}$$

The solution of this generalized plant is found by using the robust control toolbox of MATLAB. As a result of trial-and-error, the following W_S and W_T were chosen to control the resonant vibration. Then the solution was obtained at $\gamma = 62$ and the controller is also obtained. The transfer characteristic of the controller is shown in Fig. 9.

Result and discussion on suppression simulation

By applying the sine wave excitation to the base, the frequency response of the controller designed above was studied. The gain chart is shown in Fig. 10, with the dot line for non-control and solid

Table 2: Parameters

J	4000×10^{-4}[kgm^2]	E	7.5×10^{10}[N/m^2]
I	4.2×10^{-9}[m^4]	l	1.5[m]
m	2.2[kg]	k_a	7×10^3[Nm/rad]
ω_1	10.8[rad/sec]	ω_2	138[rad/sec]

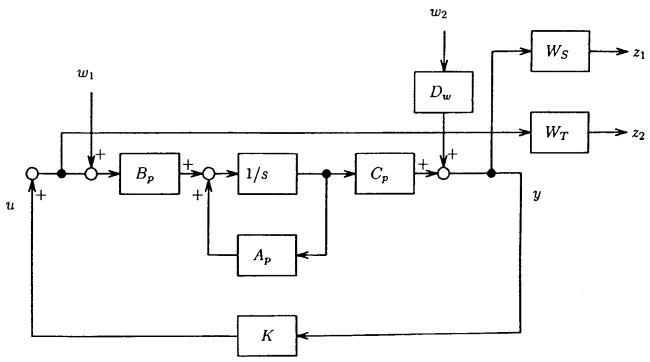

Fig. 8: Generalized plant

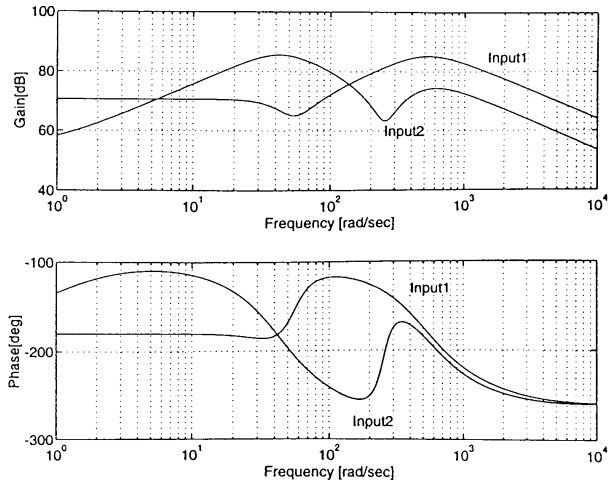

Fig. 9: Bode diagram of controller

line for controlled results. It is obvious from the chart that the first and secondary resonance is effectively controlled. The time response of the tip mass, as an impulse input is given to the base, is shown in Fig. 11, with the dot line for non-control and solid line for controlled results• It shows that the control converges the vibration in a short time. The above simulation results confirmed that the controller with the H∞ control was effective for the vibration suppression.

Outline of the prototype

The prototype of the vibration suppression device is schematically in Fig. 12. The beam is made of aluminum material, with the first resonant frequency about 3Hz or lower and the acceleration at the tip 1G or less. The beam is vertically held by a single-end supporter. The mass is added to the beam tip accordingly. Prior to starting the suppression, excitation can be applied to the device if necessary. The suppression device consists of a giant magnetostrictive actuator mechanism, electronic equipment for the control, measuring instrument. A pin hinge is built in the beam supporter. By the paired giant magnetostrictive actuator, the controllable force around the pin hinge is generated. Parameters measured are acceleration of the beam tip, strain of the beam root, displacement of the magnetostrictive actuator, any of them can be used as input signal to be fed back the control system.

Suppression experimental result and discussion

The vibration suppression experiment was carried out at the prototype device without doing the feedback control, but inputting a proper sine wave corresponding to the resonance frequency and in opposite phase of the vibration detected from the signal of the accelerometer. The control was continued until the vibration (the maximum acceleration) was constantly below a specified level.

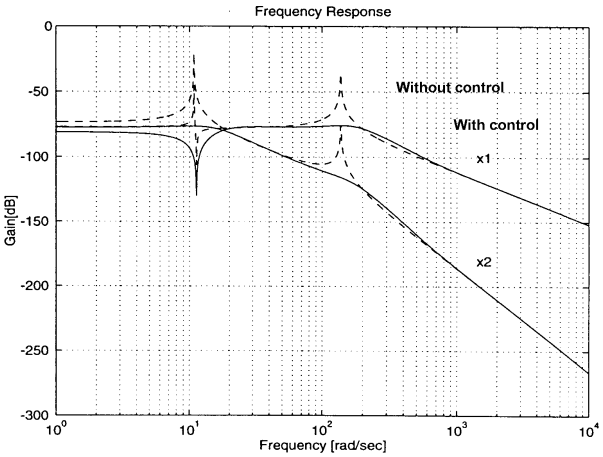

Fig. 10: Gain diagram of frequency response

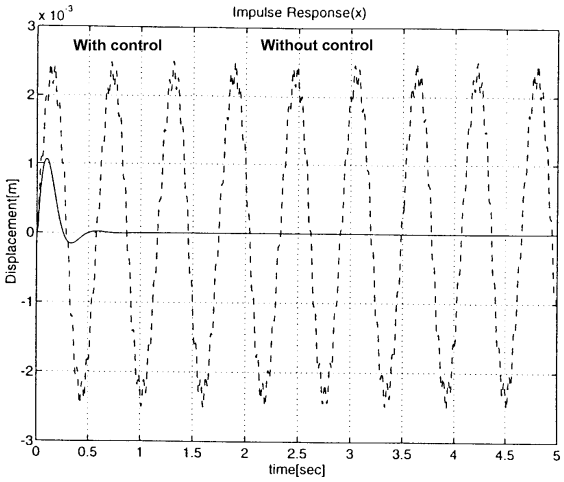

Fig. 11: Impulse response

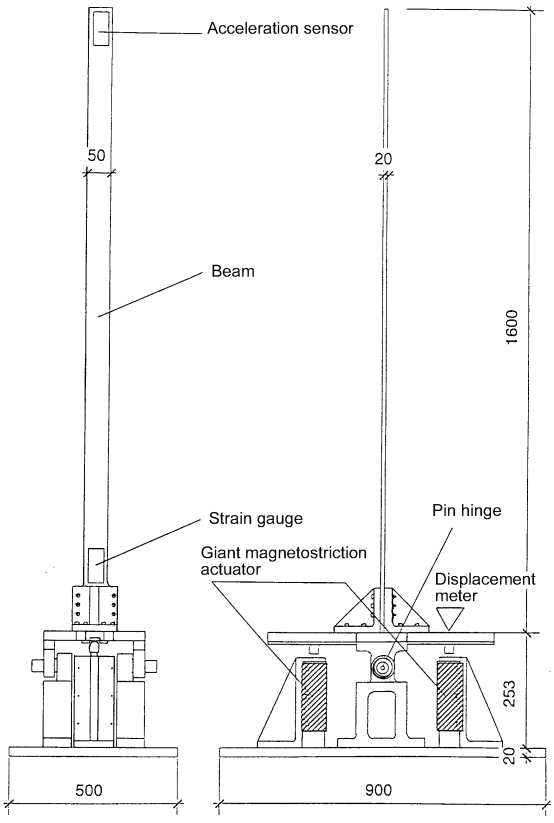

Fig. 12: Schematic drawing of the prototype

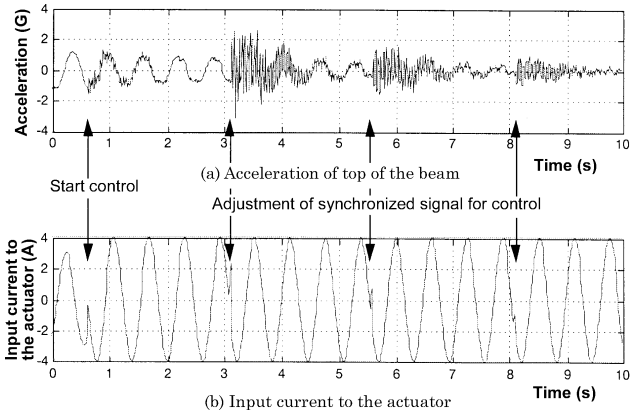

Fig. 13: An example of vibration suppression experimental result

The beam was first excited from a standstill state by applying into the magnetostrictive actuators a sine wave current (maximum 3A) with the first order frequency of the beam. The suppression was then started from the steady state of vibration, by giving the actuators a maximum 4A current whose phase was inverted from that of the input current. In order to the compensate the phase deviation taking place during the suppression, the phase of suppression current was corrected every few seconds according to the information from the accelerometer. Figure 13 is the time history of the acceleration at the tip of beam and the suppression current input into the actuators. The beam tip acceleration has dramatically decreased in about 10 seconds after the suppression started.

CONCLUSION

This paper described the properties of the giant magnetostrictive materials made by powder metallurgy and its potential applications for the aerospace structure. The results achieved can be summarized as follows;

(1) In addition to the magnetostrictive property as good as that made by the Bridgman Method (Terfenor-D), the powder metallurgy process is able to produce good isotropic components by not applying the magnetic field during the compression. Also nearly perfect anisotropic components can be quickly and inexpensively produced into various sizes and shapes without scarifying performances. The powder metallurgic magnetostrictive materials are sort of promising material for various future devices.

(2) At the development of the vibration suppression device for aerospace structure, it has been confirmed from the simulation and experiment that proposed GMM actuator is able to perform an effective and fast suppression.

(3) The prototype developed has verified the potential and effectiveness of powder metallurgic GMM actuator in the application to the aerospace industry.

ACKNOWLEDGEMENTS

This prototype was developed as a part of the project organized by the Society for Non-Traditional Technology and founded by NASDA (National Space Development Agency of Japan)

REFERENCES

[1] A. E. Clark, *Magnetostrictive Rare Earth Fe Compounds Naval Surface Warfare Center*, Edited by E. P. Wohlfarth, (USA), (1980), 533

[2] H. Eda, " New techno-world of machine tool and production processing evolution (Giant magnetostrictive material for innovation of intellectualized actuators and sensors) ", *Transaction of the Japan Society of Mechanical Engineers*, 63 - 610 C (1997) pp.3321-3326.