ULTRASONIC MEASUREMENT OF IN-PLANE MODULI OF PULTRUDED COMPOSITES

R. Prabhakaran[1], M. Saha[2], and T. Galloway[3]

[1,2]*Department of Mechanical Engineering, Old Dominion University*
Norfolk, Virginia 23529, U.S.A.
[3]*College of Engineering and Technology, Old Dominion University*
Norfolk, Virginia 23529, U.S.A.

SUMMARY: The in-plane Young's modulus (E) and shear modulus (G) of pultruded composites have been measured using piezoelectric sensors. The feasibility of using a single specimen, in the form of a circular disk, has been shown. Two types of piezoelectric crystals, one for producing dilatational waves ('E-crystal') and the other for producing shear waves ('G-crystal') have been utilized. The baseline values for the angular dependence of E and G for the composite material were established by testing bar specimens; the shear modulus was measured using G-crystals on opposite faces as well as by positioning E-crystals in slots near the opposite ends. In the case of circular disk specimens of a large diameter, the G-crystals are limited by the energy dissipation in the composite; positioning E-crystals in slots at the opposite ends of diameters provides a convenient way of measuring G.

KEYWORDS: Young's modulus, shear modulus, pultruded composites, circular disk specimen, piezoelectric sensors.

INTRODUCTION

Many test specimen configurations and test methods have been used for measuring the in-plane elastic constants of orthotropic composites. The more important methods can be broadly classified into static, vibration and wave propagation methods.

The static test procedure utilizes electrical resistance strain gages bonded to different test specimens. In the straightforward procedure, tensile specimens, with the specimen axis oriented at 0°, 45° or 90° to the major reinforcement direction, are tested in tension to establish the principal elastic constants. The angular dependence of the elastic constants

(anisotropy) can be obtained by employing the transformation equations or by testing specimens with different fiber orientations. In a novel approach, Prabhakaran et al. [1] showed the feasibility of using a single specimen, in the form of an orthotropic half-plane subjected to a concentrated edge-load, for measuring all the in-plane elastic constants.

Several investigators have used vibration techniques to measure the Young's modulus of composite materials. Composite cantilever beam specimens ($\theta = 0^o$) were tested by Tauchert and Moon [2] using a sinusoidal oscillator and an electromagnetic transducer. Prabhakaran and Saha [3] have tested pultruded composite bar specimens, with the axes of the specimens oriented at 0° to 90°, in increments of 15°, with the pultrusion direction. Both static measurements, employing electrical resistance strain gages, and vibration measurements, employing the first three modes, have been presented and compared in Ref. 3.

Ultrasonic wave speed measurement has also been used to determine the elastic constants of composites. Through-transmission measurements, requiring access to both sides of a specimen, as well as single sided measurements have been reported in the literature. In some of the investigations [4,5], specimens have been cut along different angles with the major material symmetry axis and the longitudinal and transverse wave velocities have been measured. In other investigations, the immersion technique has been used: refraction and mode conversion at the interface have been used to generate the desired mode at the desired angle in the composite. Minachi, Hsu and Thompson [6] proposed an acoustoultrasonic technique in which the elastic constants of transversely isotropic materials are deduced from the time-of-flight of obliquely reflected echoes received by another transducer located on the same surface. Dally, Link and Prabhakaran [7] utilized a specially fabricated transparent and birefringent composite model material in measuring the velocities of the dilatational and shear waves by dynamic photoelastic methods.

The ultrasonic measurement techniques developed and utilized in many of the investigations have been more scientific than engineering: in other words, they are not as simple as the engineering methods employing electrical resistance strain gages. In a way, the complexity of the anisotropic and inhomogeneous composite materials has contributed to the complexity of the ultrasonic techniques. Zurbrick [8] and Schultz [9] have reported measurements of composite Young's modulus as a function of the fiber orientation. They used a circular disk specimen of 25 mm. to 32 mm. diameter; the wave propagation velocities across diameters at various angles were measured and the Young's modulus was determined as a function of the angle.

In the present work, piezoelectric sensors that produce and detect dilatational or shear waves have been used to measure the Young's modulus and the shear modulus of pultruded composites. Straight bar specimens, with different fiber orientation angles, were used to establish baseline values. The focus of this investigation was to study the feasibility of using a single circular specimen. It was found that for larger specimens, the sensors producing and detecting shear waves exhibited some limitations due to energy dissipation in the composite material; therefore, a procedure was developed to utilize the sensors, that were primarily meant for dilatational waves, for producing and detecting shear waves also.

THE TEST MATERIAL: PULTRUDED COMPOSITE

Pultruded composites have emerged as important structural materials and are finding increasing use in civil engineering infrastructural applications. The material used in the present investigation was a glass fiber reinforced polyester composite with alternating layers of glass rovings and continuous strand mats. While pultruded composites are available in different shapes and thicknesses, the specimens for the current study were fabricated from 6.3 mm thick sheets. The composite is anisotropic as well as inhomogeneous.

EXPERIMENTAL PROCEDURE

Piezoelectric crystals have been used to generate and detect ultrasonic signals. For producing and detecting the dilatational waves, the sensors used were PZT-5B Bimorphs manufactured by Morgan Matroc; these will be referred to as the E-crystals. For producing and detecting the shear waves, the sensors used were C 1600 soft PZT manufactured by Aura Ceramics; these will be referred to as the G-crystals. Both types of crystals were approximately 10 mm square and 0.6 mm thick.

The sensors were positioned on the test specimens through a coupling agent at the desired locations (to be described later). A function generator (HP 8111A by Hewlett-Packard) was used to generate a single sinusoidal wave at one of the resonant frequencies of the particular piezoelectric crystal; the frequency was selected to ensure that the wavelength was a suitable fraction of the length traversed by the signal (specimen dimension). A schematic arrangement of the experimental set up is shown in Fig. 1.

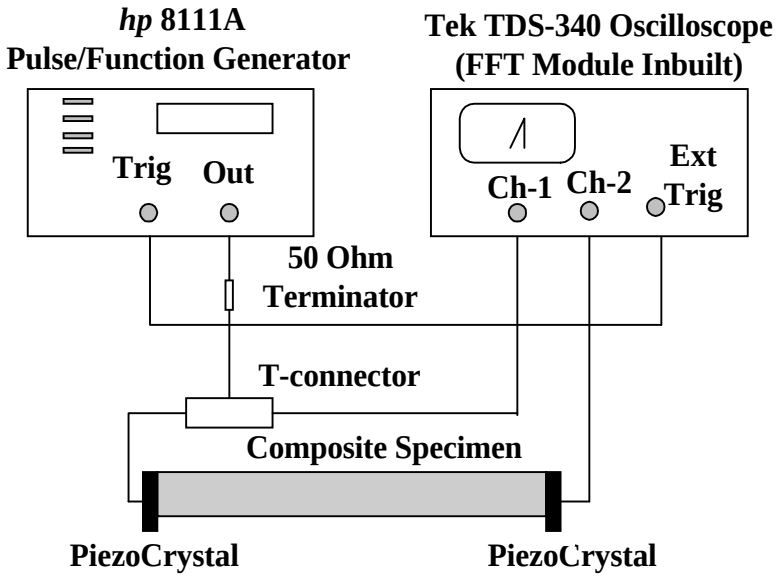

Fig. 1: Schematic diagram of ultrasonic tests

The transmitted signal as well as the input signal were displayed on a storage oscilloscope (Tek TDS 340 by Tektronix). The storage oscilloscope averaged the results from a number of pulses (in separate experiments) and the time of travel was measured. The wave velocity, obtained by dividing the specimen length by the time of travel, was converted to the elastic modulus through the appropriate equation.

MEASUREMENT OF YOUNG'S MODULUS

Seven bar specimens, 30 cm long and 2.5 cm wide, with angular orientations of 0° to 90° (in steps of 15°) with the pultrusion direction, were tested to provide reference values for comparison. Three circular disk specimens, 2.5 cm, 7.5 cm and 30 cm in diameter, were also tested. Piezoelectric sensors producing and sensing dilatational waves (E-crystals) were positioned on opposite faces of the bar specimens and at the opposite ends of diametral lines marked at different orientations on the circular disk specimens. The velocity of the dilatational waves was measured, as described earlier, and was converted into the Young's modulus according to

$$E(\theta) = [V_L(\theta)]^2 \rho \qquad (1)$$

where *E* is the Young's modulus, θ is the angle between the measurement direction and the pultrusion direction (major material symmetry axis), V_L is the dilatational wave velocity and ρ is the composite material density. The measured values of E for the different specimens are shown as a function of the angle θ in Fig. 2. This figure shows that the results for the bar, 7.5 cm disk and 30 cm disk are close to each other while the modulus values obtained for the 2.5 cm disk are significantly lower. The static strain gage data obtained for 30 cm long bar specimens are also shown in the figure; these are lower than all the piezoelectric results obtained with the 30 cm bar, 7.5 cm disk and 30 cm disk, but are significantly higher than the piezoelectric results obtained with the 2.5 cm disk. This shows that the 2.5 cm diameter disk is not a satisfactory specimen for the ultrasonic method.

The differences between the bar strain gage results on the one hand and the piezoelectric results for the bar, 7.5 cm disk and 30 cm disk on the other can be explained on the basis of the dynamic effects in the ultrasonic tests; the dynamic modulus of polymeric materials (and polymer based composites) is higher than their static modulus.

MEASUREMENT OF SHEAR MODULUS WITH G-CRYSTALS

Piezoelectric transducers have been used in the shear wave testing of soil specimens [10, 11]. The advantages and disadvantages of using bender transducers (producing dilatational waves) and shear plate transducers (producing shear waves) are discussed in Ref. 11, with reference to the testing of soils.

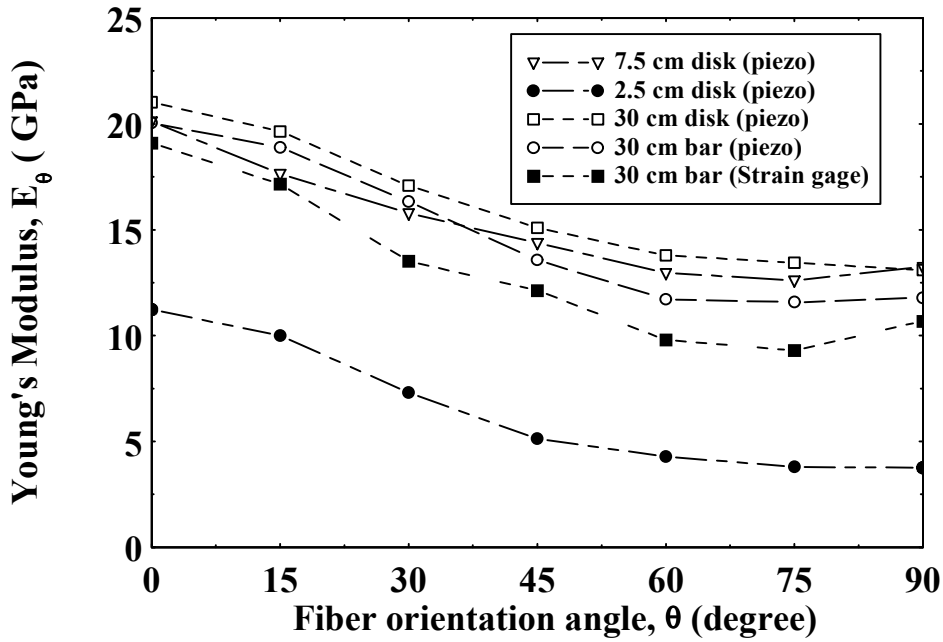

Fig. 2: Variation of Young's modulus with fiber orientation angle

In the case of fiber reinforced composites, the use of shear plate transducers appears straightforward; it is straightforward as long as a sufficiently high voltage signal can be applied at the required resonant frequency of the transducer. In the present investigation, the signal generator output was 16.6 V and the only amplifier available was designed for a gain of 6 at 13.5 KHZ. The resonant frequencies of the shear transducers were much higher than 13.5 KHZ and there was practically no gain at these frequencies. Consequently, the transmitted shear signal was very small and hard to detect, especially in larger specimens due to energy dissipation. Only 7.5 cm long bar specimens and 2.5 cm diameter and 7.5 cm diameter disk specimens could be tested with shear plate transducers. The same procedure described for the E-transducers was followed. The shear modulus was determined by

$$G(\theta) = [V_S(\theta)]^2 \rho \qquad (2)$$

where *G* is the shear modulus and V_S is the shear wave velocity. The measured values of *G* for the different specimens are shown as a function of the angle θ in Fig. 3. For comparison purposes, the G values obtained from the static measurements on strain gaged specimens (applying the transformation equations) are also shown. From this figure, it is seen that the results for the 2.5 cm diameter disk are the lowest almost for the entire range of θ while those for the 7.5 cm disk are the highest. The results obtained for the 7.5 cm bars are the closest to the strain gage results. It should be noted that all the curves show the same trend and are in a fairly narrow band.

MEASUREMENT OF SHEAR MODULUS WITH E-CRYSTALS

As mentioned earlier, because of the experimental limitations, a sufficiently large amplitude shear wave signal could not be transmitted from the G-crystal through the composite specimens at the desired resonant frequencies. This drawback resulted in a restriction on the size of the specimen that could be tested; the length of the bar and the diameter of the circular disk specimen were limited to 7.5 cm. Even for these small size specimens, the amplitude of the transmitted signal was small; this resulted in some error in the measurement of the time of passage of the shear wave.

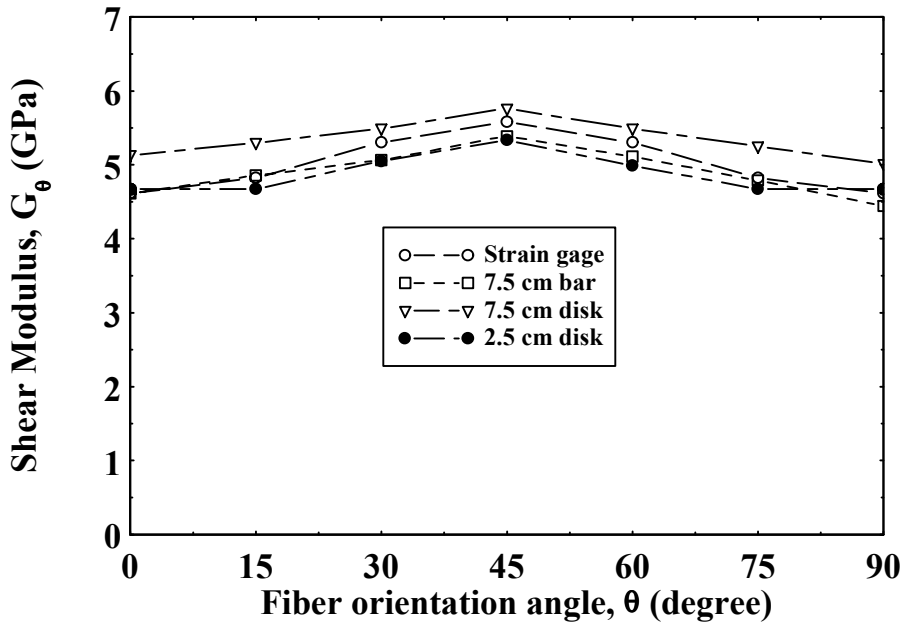

Fig. 3: Variation of shear modulus with fiber orientation angle (G measured with G-crystals)

In order to improve the amplitude of the transmitted shear wave signal and to increase the size of the specimen which could be tested, in the absence of a suitable amplifier, it was decided to use the E-crystal itself to transmit a shear wave in its own plane. It is recognized that a ceramic element that mainly produces shear displacements will also generate small compressive displacements [11]; transducers consisting of transverse-expansion mode piezoelectric crystals (benders) have been used to generate and detect shear waves [12,13].

In this phase of the study, seven pultruded bars of 30 cm length, with the angle between the bar axis and the pultrusion direction varying from 0° to 90° in increments of 15°, and a 30 cm diameter circular disk were tested. Slots were machined at the opposite ends of the bars parallel to the bar axis, as shown in Fig. 4(a). On the circular disk, slots were machined at the opposite ends of diameters which were oriented at angles 0° to 90° in increments of 15° with the pultrusion direction, as shown in Fig. 4(b). In the slots at opposite ends of the bar or the disk diameter, E-crystals were positioned with the couplant and were excited at one of their resonant frequencies. One of the E-crystals acted as the transmitter and the other as the

receiver. The shear wave velocity was determined and was used to calculate the shear modulus. The measured shear modulus values are shown in Fig. 5. This figure shows the G values determined for the composite bars and the disk using E-crystals. For comparison, the static results obtained from the strain gaged bars (using transformation equations) are also shown. Again, the static results are seen to be the lowest, while the disk results are the highest for most of the range of θ. It should be noted that all the results fall in a fairly narrow band, indicating good agreement.

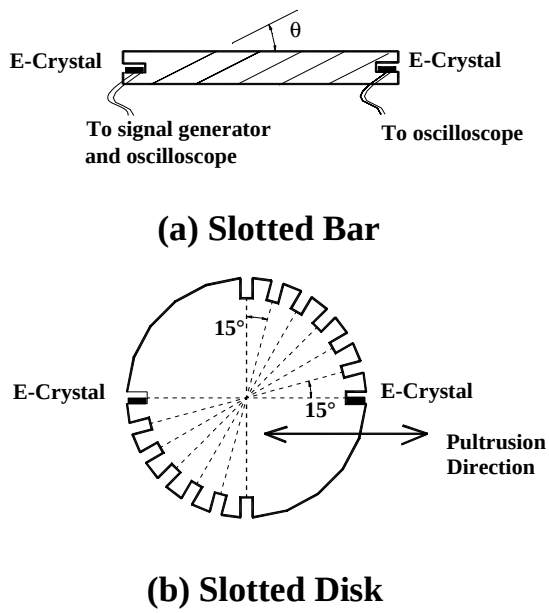

Fig. 4: Schematic diagram of slotted bar and disk specimens

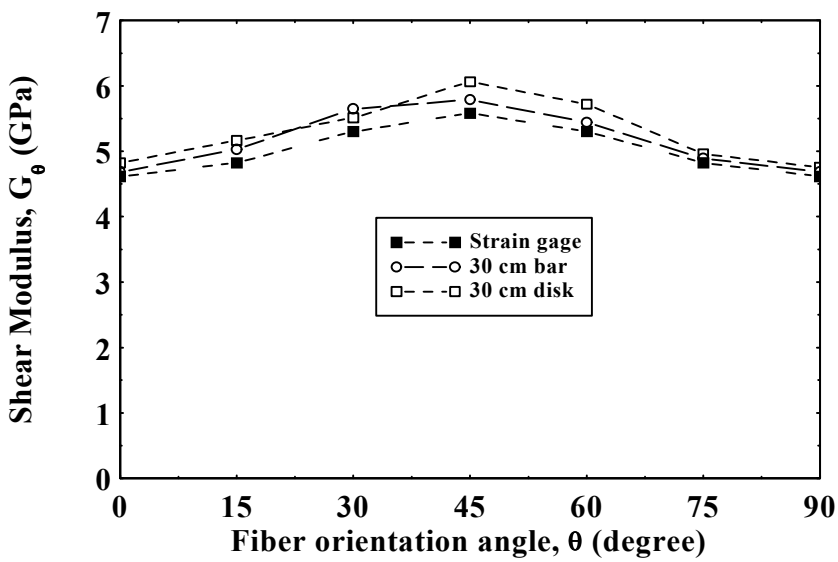

Fig. 5: Variation of shear modulus with fiber orientation angle (G measured with E-crystal)

CONCLUSIONS

In this study, the in-plane Young's modulus and shear modulus of a pultruded glass fiber reinforced polymer composite have been determined in different in-plane directions using piezoelectric transducers. The focus of this study has been to show the feasibility of using a single specimen, in the form of a circular disk, for the complete characterization. Piezoelectric transducers that produce and detect dilatational waves (E-crystals) and shear waves (G-crystals) have been employed. Composite bar specimens have also been tested, for comparison purposes. The specimen size is limited by the shear wave attenuation in the composite, especially in the absence of a suitable amplifier. This problem was overcome in this investigation by positioning the E-crystals in slots and making use of the shear waves transmitted and received in the plane of the crystals. It has been shown that a single circular disk specimen is sufficient to determine the inplane E and G for all orientations and E-crystals can be used to measure both E and G.

REFERENCES

1. Prabhakaran, R. and Chermahini, R. G., "Application of the Least-Squares Method to Elastic and Photoelastic Calibration of Orthotropic Composites," *Experimental Mechanics*, Vol. 20, No. 7, 1980, pp. 233-239.

2. Tauchert, T. R. and Moon, F. C., "Propagation of Stress Waves in Fiber-Reinforced Composite Rods," *AIAA Journal*, Vol. 9, No. 8, 1971, pp. 1492-1498.

3. Prabhakaran, R. and Saha, M., "Measurement of Elastic Constants of Pultruded Composites," *Proceedings of the Fourth International Conference on Composites Engineering*, Big Island of Hawaii, July 6-12, 1997, Hui, D., Ed, pp. 803-804.

4. Zimmer, J. E. and Cost, J. R., "Determination of the Elastic Constants of a Unidirectional Fiber Composite Using Ultrasonic Velocity Measurements," *Journal of the Acoustical Society of America*, Vol. 47, No. 3, 1970, pp. 795-803.

5. Papadakis, E. P., Patton, T., Tsai, Y. M., Thompson, D. O. and Thompson, R. B., "The Elastic Moduli of Thick Composite as Measured by Ultrasonic Bulk Wave Pulse Velocity," *Journal of the Acoustical Society of America*, Vol. 89, No. 3, 1991, pp. 2653-2657.

6. Minachi, A., Hsu, D. K. and Thompson, R. B., "Single-Sided Determination of Elastic Constants of Thick Composites Using Acoustoultrasonic Technique," *Journal of the Acoustical Society of America*, Vol. 96, No. 1, 1994, pp. 353-362.

7. Dally, J. W., Link, J. A. and Prabhakaran, R., “A Photoelastic Study of Stress Waves in Fiber Reinforced Composites,” *Proceedings of the Twelfth Midwestern Mechanics Conference*, University of Notre Dame, Indiana, 1970, Vol. VI: Developments in Mechanics, pp. 937-949.

8. Zurbrick, J. R., “Variant Properties of Composite Materials,” *Aerospace-AFML Conference on NDT of Plastic/Composite Structures*, Dayton, Ohio, Paper No. 18, 1969.

9. Schultz, A. W., “Nondestructive Testing of Advanced Fiber-Reinforced Composites,” *Society of Aerospace Materials and Process Engineers Quarterly*, Vol. 2, No. 2, 1971, pp. 31-37.

10. Lawrence, F. V., “Ultrasonic Shear Wave Velocity in Sand and Clay,” *Research Report R65-05, Soil Publication No. 175*, Massachusetts Institute of Technology, Cambridge, MA, January 1965.

11. Brignoli, E. G. M., Gotti, M. and Stokoe, K. H., “Measurement of Shear Waves in Laboratory Specimens by Means of Piezoelectric Transducers,” *Geotechnical Testing Journal, GTJODJ*, Vol 19, No. 4, 1996, pp. 384-397.

12. Shirley, D. J. and Anderson, A. L., “Acoustical and Engineering Properties of Sediments,” *Report No. ARL-TR-75-58*, Applied Research Laboratories, University of Texas at Austin, 1975.

13. Agarwal, T. K., “Micromechanics of Granular Materials and Its Relation to Wave Velocity,” *Ph.D. dissertation*, Department of Civil Engineering, Old Dominion University, Norfolk, Virginia, 1991.