MODELLING OF TRANSVERSE CRACKING UNDER UNIAXIAL FATIGUE LOADING IN CROSS-PLY COMPOSITE LAMINATES : EXPERIMENTAL VALIDATION

C. Henaff-Gardin, I. Goupillaud, M.C. Lafarie-Frenot, S. Buhr

Laboratoire de Mécanique et de Physique des Matériaux, ENSMA, BP 109, 86960 FUTUROSCOPE CEDEX, FRANCE

SUMMARY: The purpose of this study is to validate a previous analysis of a cross-ply laminate containing cracks in each layer and submitted to a thermomechanical in-plane loading. The application of this approach to the case of unidirectional mechanical fatigue of $(0_m/90_n)_s$ lay-ups allows to predict :
- the fatigue cycle number necessary for the initiation of the first matrix cracks,
- the kinetics of this damage, as well as the stage of saturation,
in any cross-ply laminate submitted to any uniaxial fatigue loading.
In this work, this approach is validated for two $(0_m/90_n)_s$ lay-ups and two fatigue loading amplitudes. From results obtained by 3D FEM calculations, an extension to $(90_m/0_n)_s$ laminates is proposed. This extension permits to obtain a good agreement between predicted and experimental crack density values at saturation but fails in reproducing fatigue cracking kinetics in such stacking sequences.

KEYWORDS: CFRP, composite laminates, fracture mechanics, fatigue, mode I, transverse cracks, aerospace applications, durability.

INTRODUCTION

In the aeronautical industry, designers need good estimates of the performance of structural parts made from polymer-matrix composite materials. In laminates subjected to fatigue loading, several damage modes, such as matrix cracking, delaminations, or fibre breakages may appear in turn. In most situations, the first mechanism to occur is matrix cracking. It can be tolerated, but its development must be carefully controlled, as it is usually followed by other harmful degradation mechanisms which can entail the ultimate failure of the part.

This study follows numerous fatigue tests which have been undertaken in the laboratory on various cross-ply composite laminates. The analysis and interpretation of these tests have

allowed to acquire a good understanding of the parameters which are governing the initiation, multiplication, propagation and saturation of matrix cracks under cyclic mechanical loadings. In particular, the influences of both the thickness and the constraint of the transverse layer, and of the cyclic loading amplitude on the complete evolution of this damage type are now well understood [1, 2]. As a consequence, the prediction of cracking evolution throughout fatigue tests implies to take into account all these parameters, in order to be able to study without reservation numerous stacking sequences under complex loadings.
A shear lag analysis has been then developed in order to model this progressive matrix cracking [3, 4]. This approach, associated with an energy release rate criterion, might be able to predict cracking evolution in every cross-ply laminate subjected to any fatigue loading The objective of the work presented here is to validate this approach by comparing the predicted data to some experimental ones obtained in different lay-ups submitted to different fatigue loading amplitudes. In particular, the influence of the position of the cracked layer in the stacking sequence (internal or external) will be emphasized.

ANALYSIS AND APPLICATION TO UNIAXIAL TENSILE FATIGUE

Many authors put their interest in developing models allowing to predict the damage propagation in long fibre composite laminates : this requires the use of some failure criterion. Nairn and Hu [5] show that strength based failure criteria are inconsistent with experimental observations. Excellent results are obtained, however, when failure is predicted with an accurate energy release rate criterion. Numerous models are focusing on the case of cross-ply laminates submitted to uniaxial quasi-static mechanical loading, with cracks only in the 90° layers. The case of a cross-ply laminate with cracks in both 0° and 90° directions has been modeled under uniaxial loading [6], and under pure shear loading [7]. As far as we know, none of theses models have led to a cracking propagation law under fatigue loading, from crack initiation to crack saturation.

The model presented here rapidly (for more details, please refer to [3, 4, and 8]) will address the case of a cross-ply laminate, under general in-plane loading, with cracks in both 0° and 90° layers. A cracking evolution law under uniaxial fatigue will then be obtained.

Basis of the modeling

In the following analysis, the studied cross-ply laminates are assumed to present symmetric and periodic stacking sequences such as $[0_m/90_n]_s$. The laminate is subjected to temperature variations ΔT and to general in-plane loading ($\overline{\sigma_x}$ and $\overline{\sigma_y}$ are the tensile stresses applied to the laminate, respectively along the x and y directions ; $\overline{\tau_{xy}}$ is the laminate shear stress). The z direction is that of the ply thickness (figure 1). The total 0° and 90° ply thickness are denoted $2t_0$ and $2t_{90}$ respectively. In order to represent simply the crack distribution in the specimen, two damage parameters are considered : the crack density d_{90} in the inner 90° layer, and d_0 in each outer 0° layer. The cracks are spanning either the entire specimen width or length.

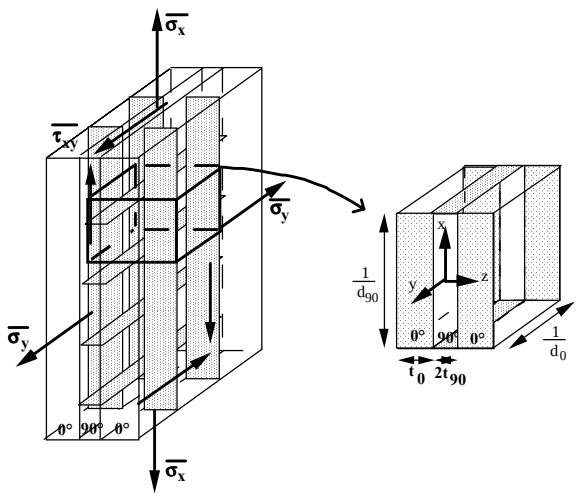

Figure 1 : Crack geometry used for modeling.

The displacements u^{α} and v^{α}, respectively in the x and y directions of the $\alpha°$ layer $(\alpha = 0, 90)$ are assumed to have a parabolic evolution with z. The derivative of the equilibrium equations, and the writing of the elastic constitutive equations lead to a system of differential governing equations. The knowledge of the boundary conditions then gives the following expressions of the stresses :

$$\begin{cases} \sigma_x^0 = A\cosh(R\lambda_x x) + B\cosh(R\lambda_y y) + K_x \\ \sigma_y^0 = A\dfrac{\nu_{12}E_2(t_0+t_{90})}{t_0E_2+t_{90}E_1}\cosh(R\lambda_x x) + B\dfrac{t_{90}E_2+t_0E_1}{\nu_{12}E_2(t_0+t_{90})}\cosh(R\lambda_y y) + K_y \end{cases} \qquad (1)$$
$$\tau_{xy}^0 = P\cosh(\psi_x x) + Q\cosh(\psi_y y) + \overline{\tau_{xy}}$$

where E_1, E_2, and ν_{12} are respectively the longitudinal, transverse moduli and Poisson ratio of the undamaged ply. R, λ_x, λ_y, ψ_x, ψ_y are parameters depending on the ply elastic constants and the laminate geometry. K_x, K_y also depend on stresses applied to the laminate and A, B, P, Q, on damage parameters d_{90} and d_0. The classical laminate theory is then used to calculate the actual values of the elastic constants $E_x^c, E_y^c, \nu_{xy}^c, \nu_{yx}^c, G_{xy}^c$ of the cracked laminate. As it could be expected, these values are all decreasing with the development of cracking, i.e. with increasing values of d_{90} and d_0.

In case of biaxial in-plane tensile loading, where the crack propagation is primarily due to opening in mode I, the strain energy release rate G_I can be obtained by :

$$G_I = \frac{t_0+t_{90}}{2}\frac{\partial\left(\dfrac{\overline{\sigma_x}^2}{E_x^c} + \dfrac{\overline{\sigma_y}^2}{E_y^c} - 2\dfrac{\nu_{xy}^c}{E_x^c}\overline{\sigma_x}\,\overline{\sigma_y}\right)}{\partial(t_0d_0 + t_{90}d_{90})} \qquad (3)$$

Identification of the model

Quasi-static and fatigue tensile tests have been undertaken on four different cross-ply stacking sequences of carbon/epoxy T300/914 laminates : $(0_7/90)_S$, $(0_3/90/0_4)_S$, $(0_3/90)_S$, $(0_2/90/0)_S$. During these tests, the evolution of the matrix cracking has been observed, and in particular, the first ply failure applied stresses σ_{fpf} have been measured in quasi-static tests. The introduction of these values in the preceding analysis (the thermal residual stresses being taken into account) allows to calculate the critical strain energy release rate values G_{Ic} corresponding to this material. An average value of G_{Ic} equal to 83.5 J/m^2 has been found for the four stacking sequences.

In the case of fatigue tests, the value of the strain energy release rate when the first matrix crack initiates (noted G_{max}) is calculated for the maximal applied stress value, and with a crack density approaching zero. Then, a phenomenological law could be obtained between N_{fpf} and G_{max}/G_{Ic}, represented for this material by :

$$N_{fpf} = 1{,}19.10^6 \; e^{-13{,}34\frac{G_{max}}{G_{Ic}}} \qquad (5)$$

This equation allows to predict, for a given laminate and a given loading level, the cycle number necessary for transverse cracking initiation.

As the matrix cracking in transverse layers of a cross-ply laminate is assumed to obey a linear fracture mechanics analysis, the evolution of cracked surface areas might be related to the strain energy release rate values. The 'experimental cracked surface propagation rate' $\frac{dS_c}{dN} = \frac{t_{90}}{t}\frac{\Delta d_{90}}{\Delta N}$ are then plotted versus the ratio $\frac{G_I}{G_{max}}$, where G_I is the strain energy release rate value for the current crack density, and G_{max} its initial value (the density tending towards zero). With such an approach, a single crack propagation curve has been obtained for a given material, whatever the cross-ply lay ups and the loading levels are. In the case of the T300/914 composite, the cracked surface propagation rate can be expressed as a power function of the strain energy release rate :

$$\frac{dS_c}{dN} = 4.10^{-4}\left(\frac{G_I}{G_{max}}\right)^{37} \text{, where } \frac{dS_c}{dN} \text{ is in 1/(mm.cycle).} \qquad (6)$$

Finally, the arrest of cracking occurs for a threshold value of the ratio $\frac{G_I}{G_{max}}$ (approximately 0.75 for the studied material). This step corresponds with the experimental observation of the saturation in crack density and length.

The application of this model to the case of unidirectional tensile fatigue of T300/914 cross-ply laminates has led to a fracture criterion and two phenomenological laws allowing to predict
- the fatigue cycle number necessary for the initiation of the first matrix cracks,
- the kinetics of this damage, as well as the crack saturation (crack density and cycle number values),
in any cross-ply laminate submitted to any uniaxial fatigue loading.

EXPERIMENTAL CONDITIONS

In order to validate this approach, fatigue tests were performed on carbon/epoxy T300/914 cross-ply laminates that have a nominal ply thickness of 0.12 mm. Four stacking sequences have been chosen to point out the influence of the position of the 90° layers in the laminate : internal in $(0_3/90_{1.5})_s$, $(0_3/90_3)_s$, or external in $(90_3/0_{1.5})_s$, $(90_3/0_3)_s$. Coupons are 250 mm long and 30 mm wide with glass/epoxy end tabs 50 mm long for gripping in an Instron servohydraulic machine.

The specimens were loaded under tension-tension fatigue in a sinusoidal load-controlled testing mode with a 0.1 load ratio and a 10-Hz frequency. The applied maximum stresses were equal to 0.5 and 0.7 σ_r, σ_r being the static failure stress of such laminates. As we have never reached specimen failure under such experimental conditions, the tests were stopped after a few million fatigue cycles.

Throughout fatigue tests, X-ray observations of the specimen have allowed the investigation of crack initiation and multiplication. Measurements of total cracked surface areas per unit volume of the specimen and crack density at saturation have been obtained for every testing condition.

EXPERIMENTAL RESULTS AND COMPARISON WITH ANALYSIS

Cracking initiation

The values of strain energy release rate at cracking initiation are given in table 1. Except for the $(0_3/90_{1.5})_s$ laminate subjected to a maximal applied stress of 0.5 σ_r, all these values are higher than G_{Ic} (83.5 J/m^2 for this material). In these cases, matrix cracking onset is observed during the first loading cycle, as predicted by the criterion $G_{max} = G_{Ic}$. In the single case when $G_{max}<G_{Ic}$ the phenomenological initiation curve predicts an amount of 80 fatigue cycles before crack onset. Experimentally, a hundred fatigue loading cycles have been necessary to initiate matrix cracking. This result seems to be in accordance with prediction. However, more tests leading to $G_{max} < G_{Ic}$ would be necessary to confirm this result.

	$(0_3/90_{1.5})_s$		$(0_3/90_3)_s$		$(90_3/0_3)_s$		$(90_3/0_{1.5})_s$	
σ_{max}/σ_r (%)	50	70	50	70	50	70	50	70
G_{max} (J/m^2)	70.8	112.9	141.3	225.9	141.5	225.9	141.9	229.8
N_{fpf} (predicted)	80	1	1	1	1	1	1	1
N_{fpf} (experimental)	100	1	1	1	1	1	1	1

Table 1 : Comparison of predicted and experimental values of fatigue cycle numbers at cracking initiation.

Cracking propagation (multiplication and widthwise growth)

The evolutions of cracked surface area per unit volume of the specimen are given against the fatigue cycle number on figure 2. In this figure, the only fatigue testing condition $\sigma_{max} = 0.5\sigma_r$ is considered. For every experimental condition, two specimens have been tested. As the results have been found very reproducible, the mean values of these two tests are therefore given in following figures.

The evolutions of the cracked surface area are similar for the four laminates but they appear primarily depending on the location of the transverse 90° plies in the specimen, that is to say internal or external. For every lay-up, the cracked surface area increases rapidly up to a saturation value. This ultimate value strongly depends on the location of the cracked layer : it is about twice as high in an internal ply (0.5 /mm and 0.56 /mm for $(0_3/90_3)_s$ and $(0_3/90_{1.5})_s$ to be compared to 0.23 /mm and 0.25 /mm for $(90_3/0_3)_s$ and $(90_3/0_{1.5})_s$). This saturation in cracked surface area is achieved earlier in the external layers and is observed only at the end of the fatigue tests in the $(0_3/90_{1.5})_s$ laminate. As a consequence, the matrix cracking is more progressive along the fatigue testing in the $(0_3/90_3)_s$ and $(0_3/90_{1.5})_s$ lay-ups. The slight differences observed between the cracking behaviour of these two laminates are in accordance with the influence of the transverse layer thickness described in many experimental works. On the other hand, no significant difference is observed in the cracked surface area evolution due to the difference in laminate stiffness of the $(90_3/0_3)_s$ and $(90_3/0_{1.5})_s$ in which the 90° external layer thickness is the same.

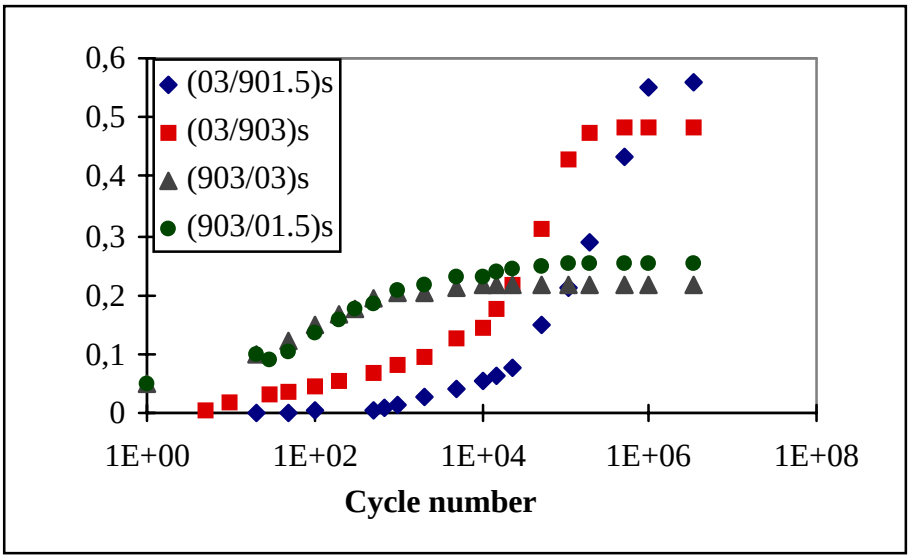

Fig. 2 : Fatigue cracked surface evolution with fatigue cycle numbers.

Similar curves have been obtained for the testing condition $\sigma_{max} = 0.7\sigma_r$. The cracked surface area evolutions are analogous. Differences with figure 2 only consist in faster kinetics of matrix cracking, the crack initiation and saturation occurring earlier during the mechanical cycling. The ultimate values have been found identical, in accordance with the existence of a characteristic damage state, independent of the fatigue loading amplitude.

The cracked surface propagation curves are given in figure 3, for the two loading levels, respectively for the internal 90° layers in figure 3a/ and for the external ones in figure 3b/. They are both compared to the predicted cracking evolution and its experimental scattering band. It appears in figure 3 that there is a relatively good agreement between predicted and

experimental curves in the case of internal layers (fig 3a/) whereas the analysis failed in predicting cracking evolution in external ones (fig. 3b/).

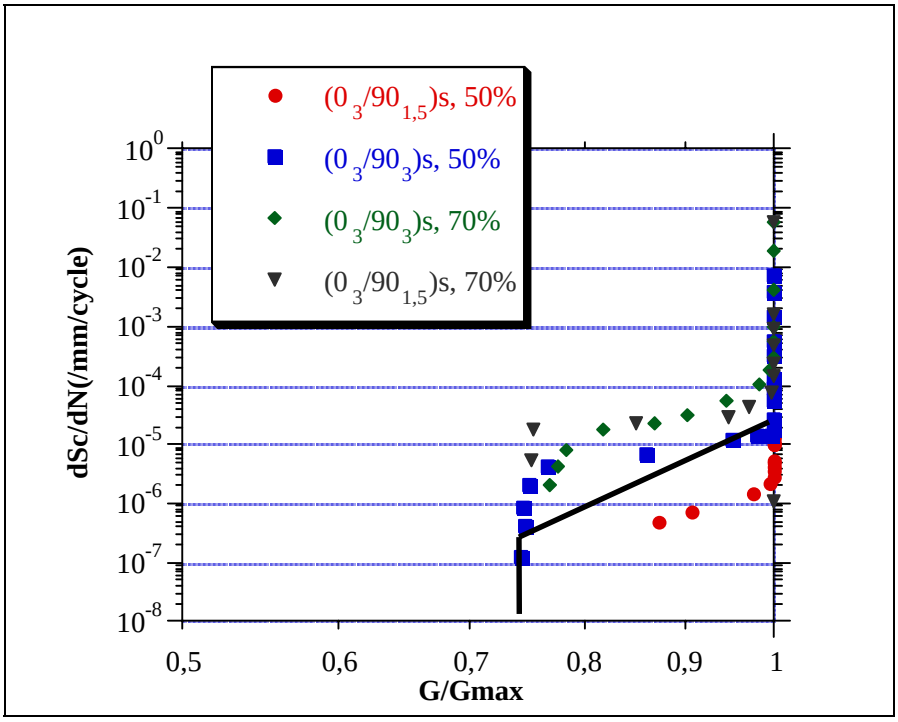

3. a/

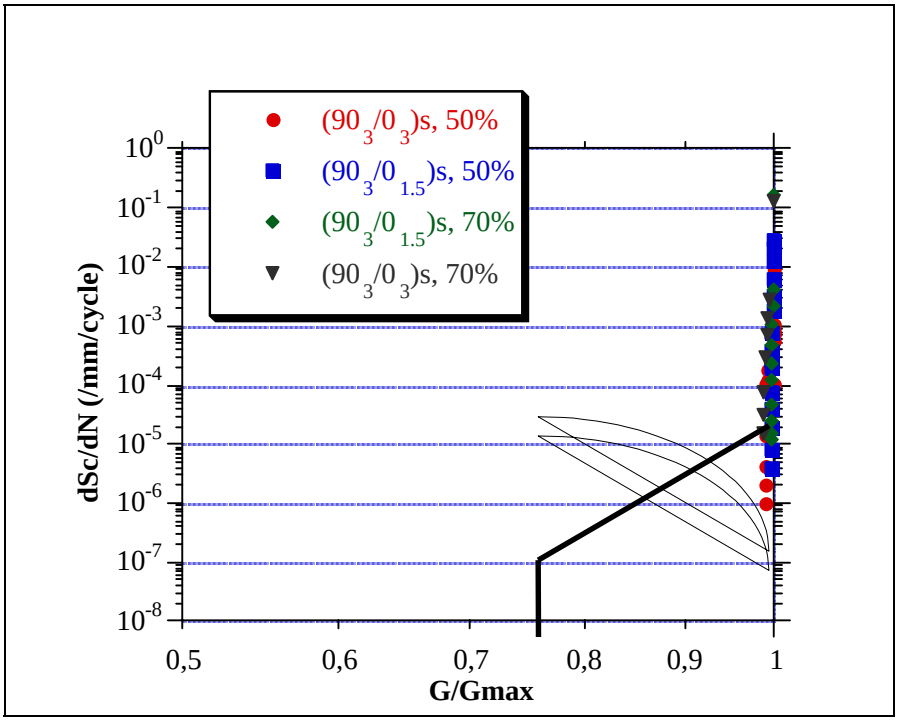

3. b/

Fig. 3: Fatigue cracked surface growth rate in transverse layers :
a/ internal layers; b/ external layers

This result must be related to the fact that the "theoretical" propagation curve has been obtained from $(0_m/90_n)_s$ lay-ups and that the analysis do not consider any edge effect. As a consequence, it can be seen in table 2 that the predicted values concerning the cracking

saturation are really close to the experimental ones in the case of the internal 90° layers : both the fatigue cycle numbers and ply crack densities at saturation agree well the predicted values. On the other hand, the predictions concerning the external layers are completely wrong : the crack saturation occurs much earlier and the ultimate crack densities are about twice less than expected.

	Internal 90° layer				**External 90° layer**			
	$(0_3/90_{1.5})_s$		**$(0_3/90_3)_s$**		**$(90_3/0_3)_s$**		**$(90_3/0_{1.5})_s$**	
σ_{max}/σ_r (%)	50	70	50	70	50	70	50	70
N_{sat} (predicted)	**$2.4\ 10^6$**	**$1.5\ 10^6$**	**$2.1\ 10^6$**	**$1.2\ 10^6$**	**$12.1\ 10^6$**	**$1.2\ 10^6$**	**$2\ 10^6$**	**$1.4\ 10^6$**
N_{sat} (experimental)	**$1.4\ 10^6$**	**$1\ 10^6$**	**$1\ 10^6$**	**$5\ 10^5$**	**$5\ 10^4$**	**$5\ 10^3$**	**$2\ 10^4$**	**$3\ 10^3$**
d_{sat} (predicted) (/mm/layer)	**1.64**		**0.86**		**0.86**		**0.86**	
dsat (experimental) (/mm/layer)	**1.65 ± 0.06**		**0.94 ± 0.04**		**0.43 ± 0.02**		**0.36 ± 0.03**	

Table 2 : Comparison between predicted and experimental values of cycle number and crack density at saturation

DISCUSSION

In order to explain the influence of the location in the laminate of the cracked 90° layer, 3D FEM calculations have been performed with Abaqus. The calculations have been realized in a unit cell corresponding to the half of that defined for the analytical calculations presented above. The boundary conditions are fixed through kinematic constraints consistent with the double periodicity of the cracked specimen. The mesh was constituted by 1200 rectangular quadratic elements and was refined in the vicinity of the 0°/90° interface. A thermoelastic calculation has been done, the uniaxial tensile loading being simulated by fixed longitudinal displacements on one side of the unit cell. The first results concerning the displacement values agree well with the assumptions made in the analytical approach : they have a parabolic evolution in the cracked layer thickness with only some slight distortions very close to the layer interface. Concerning the crack opening displacements, COD appeared smaller in the inner cracked layer than in the outer ones. The COD values against the z abscissa (in the layer thickness) are plotted in figure 4. In an external $(90°)_3$ layer, the same COD value than the maximal one measured in the mid plane of an internal $(90°)_6$ layer (z = 0.36 mm) is observed at z = 0.18 mm (see figure 4). Compared to an external cracked layer, these calculations have shown that the constraining effect of an internal cracked layer by the 0° external ones restricts significantly the crack opening displacement.

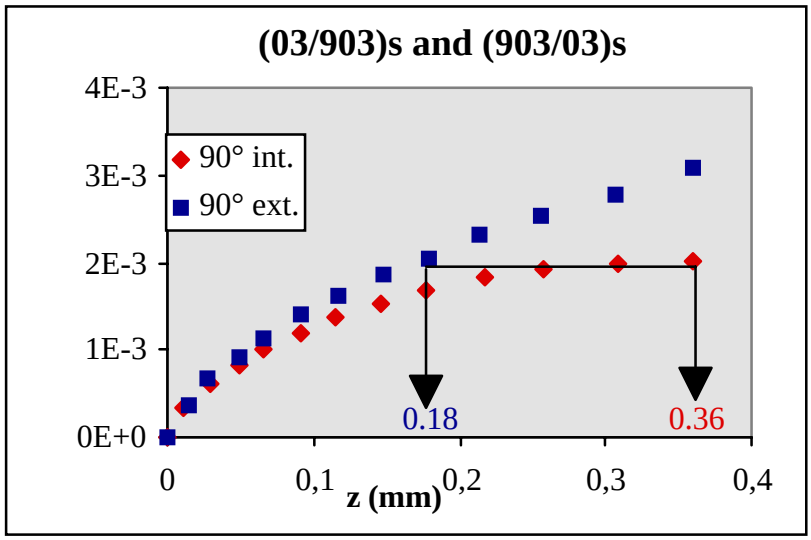

Fig. 4: MEF crack opening displacement values in the 90° layer thickness.

From these results, we have chosen to modify artificially, in the analytical calculations, the thickness of the layers when the 90° plies are external. For example, a $(90_3/0_3)_s$ is assimilated with a $(0_6/90_6)_s$ in order - firstly, to obtain about the same maximal COD value in the 90° layer and - secondly, not to modify the global laminate stiffness. The results of these modified predictions are given in the table 4 and compared to the experimental values. It appears that this modification permits to find about the same values of crack densities at saturation for both laminates. However, the experimental kinetics are not well reproduced by the analysis since the crack saturation is again observed much earlier than predicted.

	External 90° layer			
	$(90_3/0_3)_s$		**$(90_3/0_{1.5})_s$**	
σ_{max}/σ_r (%)	50	70	50	70
N_{sat} (predicted)	**$1.7\ 10^6$**	**$1.15\ 10^6$**	**$1.5\ 10^6$**	**$1.23\ 10^6$**
N_{sat} (experimental)	**$5\ 10^4$**	**$5\ 10^3$**	**$2\ 10^4$**	**$3\ 10^3$**
d_{sat} (predicted) (/mm/layer)	**0.44**		**0.42**	
d_{sat} (experimental) (/mm/layer)	**0.43 ± 0.02**		**0.36 ± 0.03**	

Table 4 : Comparison between predicted (with a modified layer thickness) and experimental values of cycle number and crack density at saturation.

CONCLUSION

The aim of this study was to validate a previous analysis of a cross-ply laminate containing cracks in each layer and submitted to a thermomechanical in-plane loading. This analysis allows to express the strain energy release rate associated with the development of matrix cracking, as a function of geometric parameters, of elastic constants of the unidirectional ply, of applied mechanical stresses and of damage parameters.

The application of this model to the case of unidirectional fatigue of $(0_m/90_n)_s$ lay-ups has led to two phenomenological laws allowing to predict :
- the fatigue cycle number necessary for the initiation of the first matrix cracks,
- the kinetics of this damage, as well as the stage of saturation, in any cross-ply laminate submitted to any uniaxial fatigue loading.

In this study, this approach has been validated for two $(0_m/90_n)_s$ lay-ups and two fatigue loading amplitudes. From results obtained by 3D FEM calculations, an extension to $(90_m/0_n)_s$ laminates has been proposed. This extension has permitted to obtain a good agreement between predicted and experimental crack density values at saturation but failed in reproducing fatigue cracking kinetics in such stacking sequences.

REFERENCES

1. Henaff-Gardin C., Lafarie-Frenot M.C., Brillaud J. and El Mahi A., Influence of the stacking sequence on fatigue transverse cracking in cross-ply laminates, *Damage detection in composite materials*, *ASTM STP 1128*, J.E. Masters, Editor., American Society for Testing and Materials, Philadelphia, 1992, pp. 236-255.

2. Lafarie-Frenot M.C., Henaff-Gardin C. and Urwald E., Specificity of fatigue damage behaviour in carbon/epoxy cross-ply laminates, *Proceedings of Fatigue 93, IFS*. Montréal, Québec, May 3-7, 1993, J.P.Baîlon and J.I. Dickson Eds., pp. 1355-1360.

3. Henaff-Gardin C., Lafarie-Frenot M.C. and Gamby D., Doubly periodic matrix cracking in composite laminates. Part 1 : general in-plane loading. *Composite Structures*, Vol. 36 (1-2), 1996, pp. 113-130.

4. Henaff-Gardin C., Lafarie-Frenot M.C. and Gamby D., Doubly periodic matrix cracking in composite laminates. Part 2 : general in-plane loading. *Composite Structures*, Vol. 36 (1-2), 1996, pp. 131-140.

5. Nairn J.A. and Hu S., Matrix microcracking (chapter 6), *in Damage mechanics of composite materials*, R. Talreja, Editor. 1994, Elsevier. p. 187-243.

6. Hashin Z., Analysis of orthogonally cracked laminates under tension. *Journal of Applied Mechanics*,. Vol. 54, 1987, pp. 872-879.

7. Tsai C.L. and Daniel I.M., The behavior of cracked cross-ply composite laminates under shear loading. *International Journal of Solids and structures*, Vol. 29 (24), 1992, pp. 3251-3267.

8. Henaff-Gardin C., Lafarie-Frenot M.C., Goupillaud I., Prediction of cracking evolution under uniaxial fatigue loading in cross-ply composite laminates, *Proc. of Int. Conf. on Fatigue of Composites*, Paris, 3-5 Juin 1997, pp. 189-196.