REHABILITATION OF CONCRETE STRUCTURES WITH CFRP STRIPS GLUED INTO SLITS

Blaschko, M.; Zilch, K.[1]

[1] *Technische Universität München, Munich, Germany*

SUMMARY: "CFRP in concrete slits" is a new method of supplementing reinforcement for the rehabilitation of concrete structures. The slits are cut into the concrete structure with a depth within the concrete cover. CFRP strips are glued into these slits. Bond tests and beam tests have been carried out to describe the mechanical behaviour. "CFRP in concrete slits" has a greater anchoring capacity than CFRP strips glued onto the surface of a concrete structure. The mechanical behaviour is stiffer under serviceability loads but more ductile in the ultimate limit state. So the CFRP material can be used more effectively.

KEYWORDS: CFRP, concrete, rehabilitation, bond, reinforcement

INTRODUCTION

A widespread method for the rehabilitation of concrete structures is to add reinforcement by gluing CFRP sheets onto the concrete surface (Fig. 1). This method can be seen as state-of-the-art apart from some still existing problems in designing, especially in designing for bond failure modes.

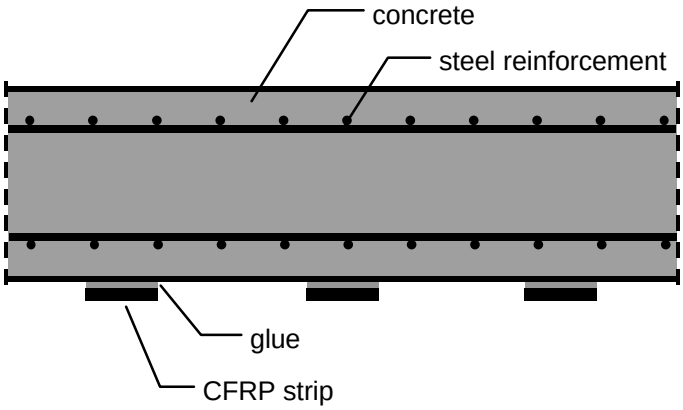

Fig. 1: State-of-the-art: CFRP strips glued onto the concrete surface

"CFRP in concrete slits" is a new method of supplementing reinforcement in concrete structures. The slits are cut into the concrete structure at a depth smaller than the concrete cover. CFRP strips are glued into these slits (Fig. 2).

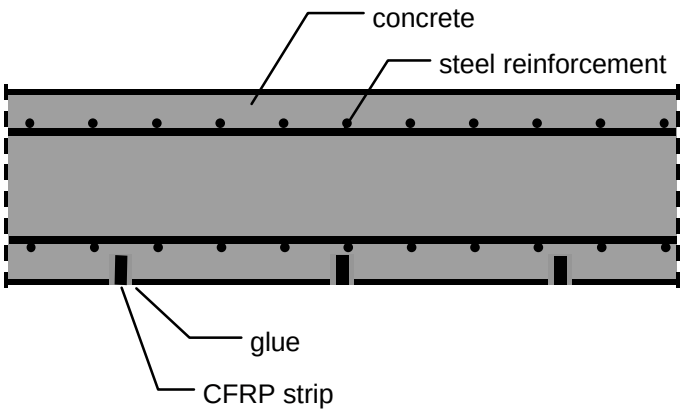

Fig. 2: CFRP strips glued into slits

The costs of cutting the slits are in the same range as the costs of preparing the concrete surface e.g. by sand-blasting. So the costs of application do not differ much from each other. The strips are protected against demolition and show a better behaviour in case of fire.

BOND BEHAVIOUR

Bond tests have been carried out to find out about the bond behaviour. These bond tests contained tests with "CFRP in slits" and with "CFRP on surface" to compare both techniques.

The bond tests were executed on double shear specimens. These specimens consist of a concrete member with a cross section of 20 cm by 20 cm and a total length of 90 cm. A gauged crack was implemented in the middle of the concrete block. This gauged crack was symmetrically bridged with two CFRP strips (Fig. 3). The concrete was grade C20/25. The tension strength of the concrete surface measured in pull-off tests was about 2 MPa.

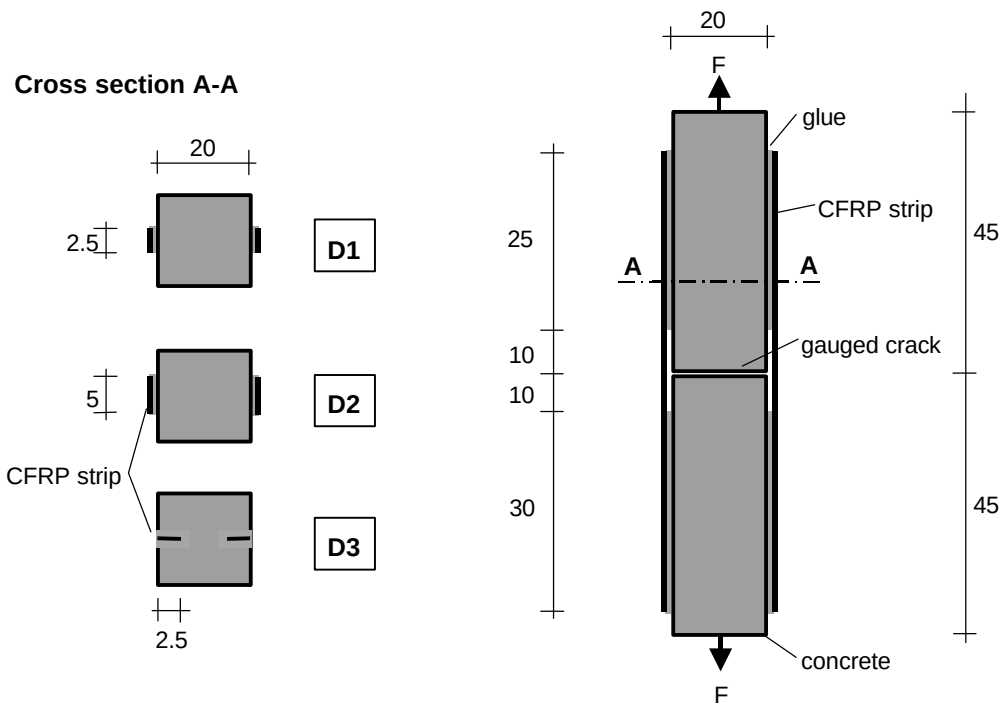

Fig. 3: Double shear specimen for bond tests

The CFRP strips, which were glued onto the surface, had a cross section of 25 mm by 1.2 mm (D1) respectively 50 mm by 1.2 mm (D2). The CFRP strips, which were glued into the slits, had a cross section of 25 mm by 1.2 mm (D3). So specimen D1 had almost the same bond area as specimen D3 and specimen D2 had the same cross section as D3.

The bond length was 25 cm on one side and 30 cm on the other side, because the bond failure was intendet to be directed to one side.

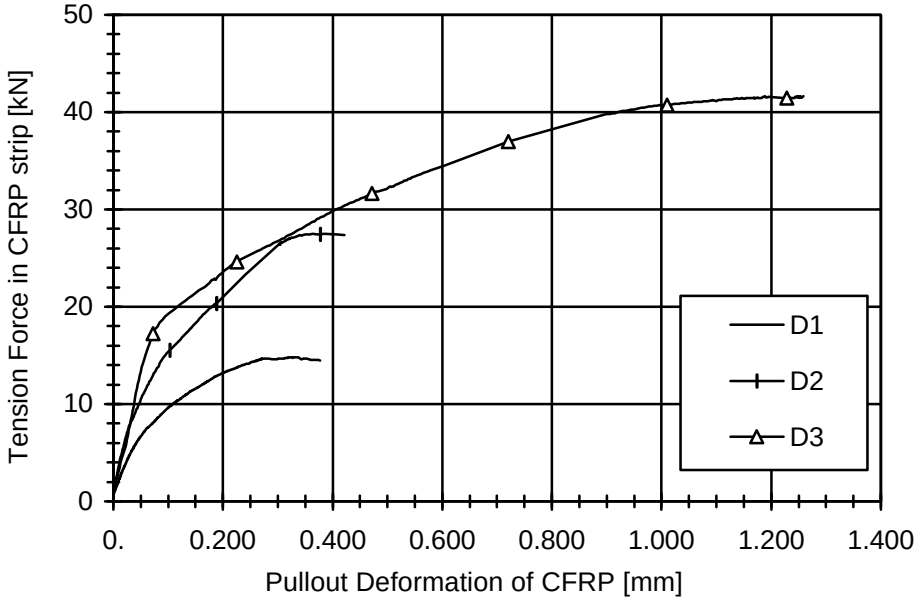

Fig. 4: Force-deformation diagram of CFRP strips

Fig. 4 shows the relation between the tension force in the strip and the deformation of the strip against the concrete body on the loaded end of the strip (pullout deformation). The strip glued in the slit is much more ductile than the strips glued on the surface. The maximum deformation is within 1.2 mm. So the bond ductility is comparable to the bond ductility of embedded ribbed steel bars. Nevertheless the bond stiffness in the low load range is higher, compared with the strips bonded on the surface. The load carrying capacity of the strip in the slit is about three times the one of the strip on the surface with the same cross section.

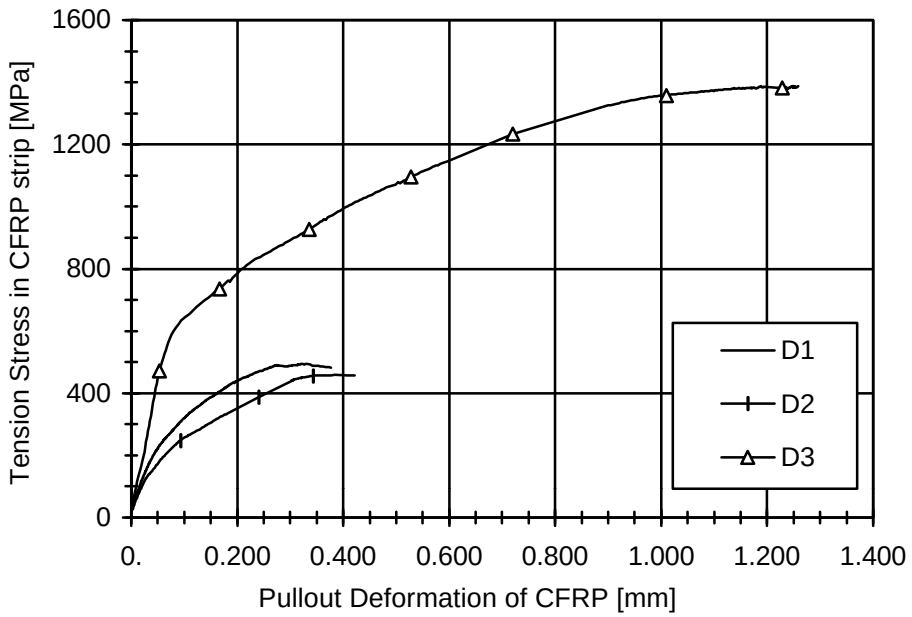

Fig. 5: Stress-deformation diagram of CFRP strips

The anchoring force is related to the cross section of the strips in Fig. 5. It shows that the anchorable force related to the width of the bond area is almost the same for the strips on the surface. The tensile strength of the strips is about 2600 MPa. That means that only 20% of the tensile strength could be anchored with strips on the surface, but more than 50% with strips in slits at a bond length of 25 cm.

MECHANICAL BEHAVIOUR OF STRENGTHENED BEAMS

The mechanical behaviour of strengthened beams was tested in beam tests with CFRP strips glued into slits as well as with strips glued onto the concrete surface. Beams A1 and A2 had a cross section 35 cm (width) by 15 cm (height). The cross section was rotated for the beams B1 and B2, which results in a height of 35 cm and a width of 15 cm. So the test specimens of series A reflect rather the behaviour of slabs, series B the behaviour of beams (Fig. 6). The beams were 3.0 m long. Concrete of grade C20/25 was used.

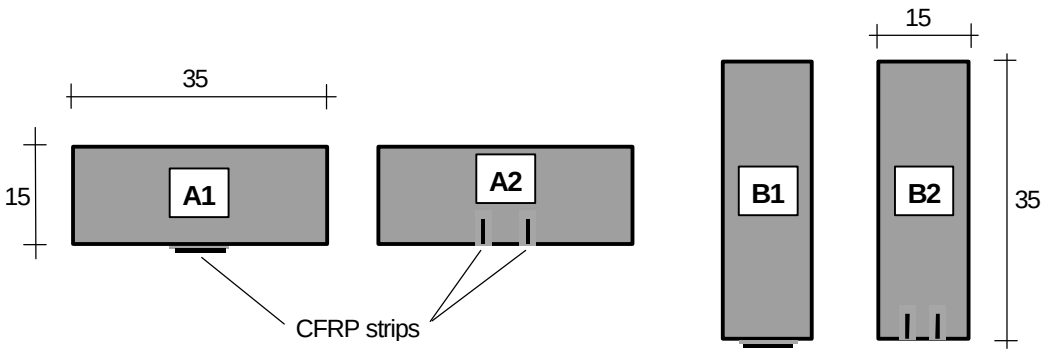

Fig. 6: Cross Sections of Tested Beams

One test specimen of each series (A1, B1) was strengthened with one CFRP strip 50 mm by 1.2 mm glued on the concrete surface. The other two (A2, B2) were strengthened with two CFRP strips 25 mm by 1.2 mm glued in slits. The slits were 26 mm deep and 3 mm wide. The strips were glued beyond the supports, because an anchoring failure at the end of the strips had

to be foreclosed, but the supports did not squeeze the strips. The embedded steel reinforcement consisted of three (A1, A2) respectively two (B1, B2) smooth steel bars of a diameter of 6 mm in the tension zone. All the beams were tested in 3-point-loading at a span of 2.5 m. The load was incrementally increased.

The beams with strips on the surface (A1, B1) failed due to peeling-off of the glued strips. The debonding started at a crack in the middle of the beam. The maximum strain in the CFRP plate reached about 0.7 %. Beam A2 with strips in slits failed due to tension failure of the CFRP strips.

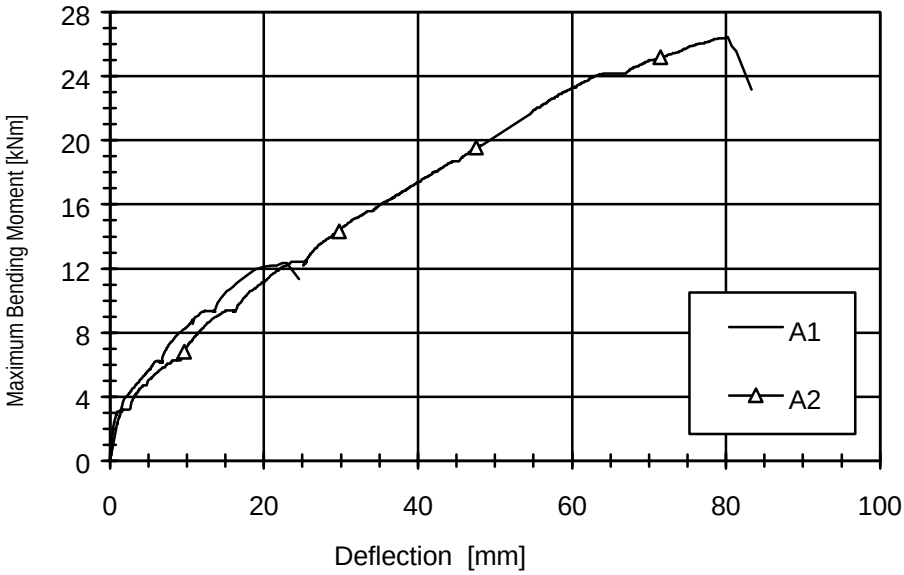

Fig. 7: Moment-Deflection Behaviour of Beam A1 and A2

The relation between the bending moment in the centre of the beam and the deflection at this point is shown in Fig. 7. It can be seen that the stiffness of both beams is almost the same. But the load carrying capacity of beam A2 is more than twice that of beam A1. This is related to the higher bond strength, which allows to use the full tensile strength of the CFRP strip in the beam.

Beam B2 failed due to a shear failure in the concrete before the tensile strength of the CFRP could be reached. Fig. 8 charts the moment-deflection curves of beams B1 and B2. Both curves show the same behaviour beside the fact, that beam B2 with strips in slits reached higher loads.

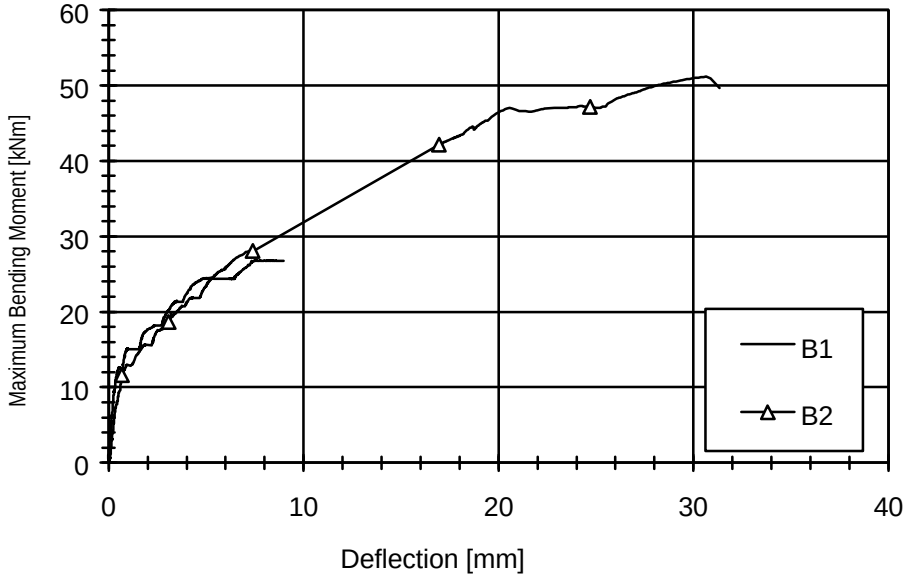

Fig. 8: Moment-Deflection Behaviour of Beam B1 and B2

The strips in the slits were able to bridge wide cracks and even shear cracks with a vertical displacement of the crack edges without peeling-off. This showed the robustness of this application technique.

FURTHER DEVELOPMENTS

The thickness of the concrete cover limits the maximum CFRP cross section which can be added to a beam or slab by using the method “CFRP in slits”. One possibility of improving this, is to use strips with T-section (Fig. 9). Only the web of the T-section is glued into a slit. The flange is glued to the surface. With this combination the cut can be reduced while there is still a high bond strength.

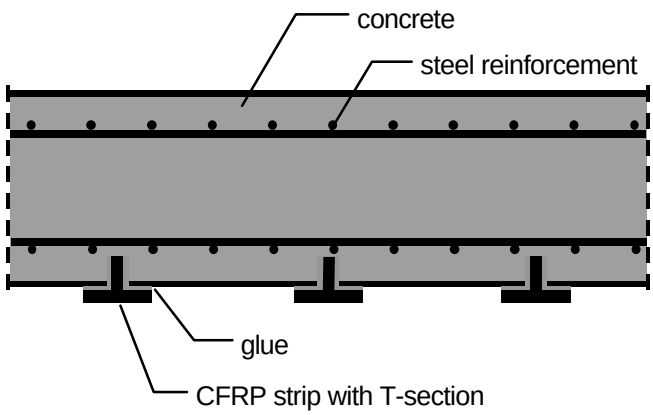

Fig. 9: CFRP profile with T-section

Another possibility for exploiting the good bond of this method is to use profiles with T-section as an additional anchoring element. Stainless steel could be used as material to take advantage of the high shear strength and isotropy of steel. An ordinary CFRP strip would be glued to this element, which is itself fixed in the slit in the concrete (Fig. 10). Therefore an ordinary CFRP strip could be anchored almost independently of the concrete quality.

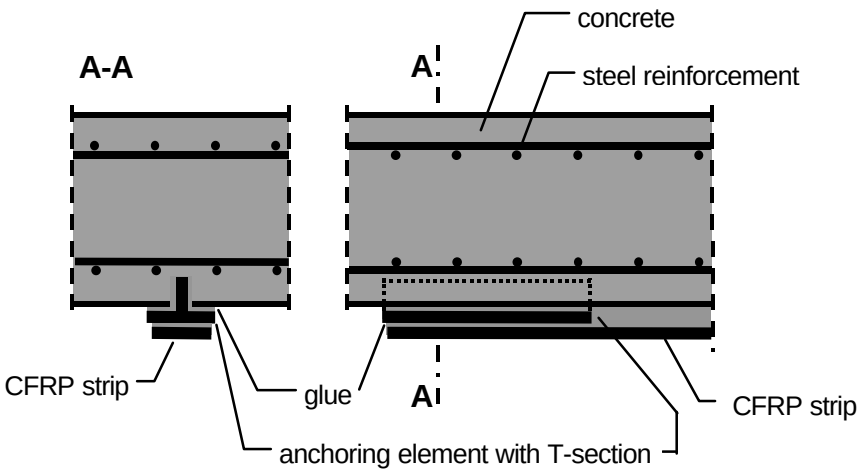

Fig. 10: T-section as an anchoring element for strips

At the moment more research is being carried out at the Technical University of Munich to study the detailed mechanical behaviour of profiles with T-section in concrete slits.

CONCLUSIONS

Bond tests showed that the strengthening technique "CFRP in concrete slits" has a greater anchoring capacity compared to CFRP strips glued on the surface of a concrete structure. The mechanical behaviour is stiffer under serviceability loads but more ductile in the ultimate limit state.

The beams with CFRP strips glued on the surface failed due to peeling-off fracture of the CFRP plate, although the end of the plate run over the supporting line. The debonding failure started at a crack in the middle of the beam. The tensile strength of the CFRP can be obtained in beams with additional reinforcement consisting of strips in slits, if there is enough load carrying capacity of the compression zone in the concrete and for shear. The bond behaviour with high strength and ductility allows to bridge wide cracking without peeling-off.

So the CFRP material can be used more efficiently, if it is glued into slits instead onto the surface. Further research is being carried out to find design rules for this new system of adding external reinforcement.

REFERENCES

[1] Blaschko, M.; Zilch, K.: “Verstärken mit eingeschlitzten CFK-Lamellen” (Rehabilitation with CFRP, in German), *Seminar Kreative Ingenieurleistungen, TU Darmstadt/Universität für Bodenkultur*, Wien; 1998.