Influence of matrix cracks and swelling on moisture absorption in cross-ply GFRP laminates.

Jan-Erik Lundgren and Peter Gudmundson

Department of Solid Mechanics, Royal Institute of Technology
SE-100 44 Stockholm, Sweden

SUMMARY: Moisture uptake in cross-ply glass fibre/epoxy laminates containing matrix cracks in transverse plies are investigated. Experimental results are compared to both finite element calculations and an approximative analytic model. The experimental results show that crack closure may occur early in the absorption process. This is confirmed by finite element calculations which indicate that even small amounts of absorbed moisture (average moisture concentration < 10 % of saturation level) may result in crack closure. As a result of crack closure, surrounding moisture environment penetration through the crack channels is prevented. The experimentally observed small differences in moisture uptake between cracked and uncracked laminates thus support the crack closure hypothesis. Direct microscopic observations of crack closure versus time furthermore confirm the mechanism. A previously developed analytic model has been extended to include the case of crack closure effects. The model compare favourable with the experimental observation.

KEYWORDS: moisture absorption, matrix cracks, experiment, finite element calculation, analytical model

INTRODUCTION

All materials basically experience ageing due to the environment as well as to the loading history. When a FRP laminate is exposed to fluctuating temperatures and moisture contents, the material properties will degrade. Degradation of composite laminates due to moisture environment have among others been discussed by Wong and Broutman [1], and Jackson and Weitsman [2]. Wong and Broutman suggest that moisture may affect the laminates through chemical changes such as relaxation and oxidations of the matrix material. Jackson and Weitsman show that a cyclic moisture environment exposed to a laminate may cause damages such as debonding at fibre/matrix interfaces and continuous cracks. Other damage modes that can occur in a fibre composite laminate are transverse matrix cracks, delaminations and fibre fracture. Chemical changes and mechanical damages are in general affecting the overall material properties eg elastic modulus, hygrothermal expansion coefficients, diffusion coefficients and so forth, see for example the work by Shen and Springer [3], and Adolfsson and Gudmundson [4]. Usually one of the first observed damage modes in a laminated composite is matrix cracking. These cracks are in general not critical for final failure, but if they are connected to a surrounding moisture environment a faster moisture absorption may be expected for the cracked laminate, [5-7]. The accelerated moisture absorption in a cracked material exposed to humid air is a result of the faster diffusion in air compared to the diffusion speed in the composite material, [8,9].

A faster moisture uptake may also develop a faster material degradation. It is therefore important to know how the moisture absorption is influenced by different kind of damage in the laminate. The most common models for the transportation of moisture in undamaged polymeric composite materials are Fickian diffusion [10] and Langmuir diffusion [11]. If the material contains cracks that significantly affect the moisture uptake, then the original Ficks law and

Langmuir law are no longer valid for the whole laminate, but locally they still work. Moisture absorption models for cracked materials have been presented by eg Weitsman [12], and Lundgren and Gudmundson [13]. In the work by Weitsman a connection to continuum damage theories and thermodynamics is made, while Lundgren and Gudmundson use a micro-mechanical approach. During the moisture uptake, the matrix cracks may close due to mechanical loads or swelling. Hence, the moisture environment may be prevented to reach the interior of the laminate through the crack channels and a slower moisture uptake may result.

EXPERIMENTAL PROCEDURE

Manufacturing and preparation

In the experiments glass-fibre/epoxy laminates made of Fiberdux 913G-E-5-30% prepreg tape were used. The laminates were manufactured by CSM Materialteknik AB in Linköping, Sweden, with six different cross-ply layups according to Table 1. The curing temperature was reached by heating the laminates at 4 ˚C/minute to 125 ˚C. The laminates were cured at this temperature for 60 minutes and then cooled at 3 ˚C/minute until 60 ˚C. During the curing the autoclave pressure was held at 0.6 MPa.

Table 1: Laminate layups used in experiments.

Laminate type:	**G1**	**G2**	**G3**	**G4**	**G5**	**G6**
Stacking sequence:	$[0_2,90]_S$	$[0_2,90_2,0]_S$	$[0_4,90_2]_S$	$[(0_2,90_2)_2,0]_S$	$[0_4,90_4,0_2]_S$	$[0_8,90_4]_S$

Panels were produced with a size of 300×300 mm^2 and from these, test specimens were cut out and polished to the dimension of 250×25 mm^2 with the 0˚-plies in the length direction. In the test specimens, transverse matrix cracks were introduced in the 90˚-plies through quasi-static tensile loading. For each laminate layup, three levels of matrix crack densities were introduced (zero, low and high). To obtain as regular distribution of matrix cracks as possible, smaller samples (25×25 mm^2) were made from the central part of the test specimens. The amount of matrix cracks in the 90˚-plies was here described by the crack density χ, defined as

$$\chi = \frac{l}{d} \tag{1}$$

where l is the ply thickness and d is the average distance between adjacent cracks in the ply. The average distance, d, for the ply was determined as

$$d = \begin{cases} \dfrac{d_{n_c}}{n_c - 1} & \text{, for } n_c \geq 2 \\ \infty & \text{, for } 0 \leq n_c \leq 1 \end{cases} \tag{2}$$

where n_c is the total number of matrix cracks in the ply and d_{n_c} the distance between the rightmost and leftmost cracks. The average crack density given by Eqns (1,2) for the different laminate types is given in Table 2.

Table 2: Low and high crack densities χ (according to Eqns (1,2)) for the different laminate layups used in the moisture uptake experiment.

Laminate type:	**G1**	**G2**	**G3**	**G4**	**G5**	**G6**
Low crack density:	0.53	0.36	0.43	0.44	0.40	0.30
High crack density:	0.69	0.59	0.67	0.56	0.65	0.67

Moisture absorption

For each combination of laminate type and crack density, five samples were used in the moisture absorption test. The conditioning of the samples was accomplished with a Noske-Kaeser KSP 252/70 H climate chamber and the change in moisture content was measured by weighting the samples with a Sartorius BP110 S balance. As preconditioning, the samples were dried in the climate chamber at a temperature of 100 ˚C and no relative humidity until no change in the weight could be measured. After the drying was complete, the environment in the chamber was changed and held at 70 ˚C and 85 % relative humidity. Throughout the conditioning, the average weight change was measured and plotted as a function of time for each combination of laminate stacking and crack density. The results presented in Fig. 1 show that the cracks in the 90˚ plies do not significantly affect the average moisture absorption in the laminates. This behaviour is similar for all laminate types and all crack densities.

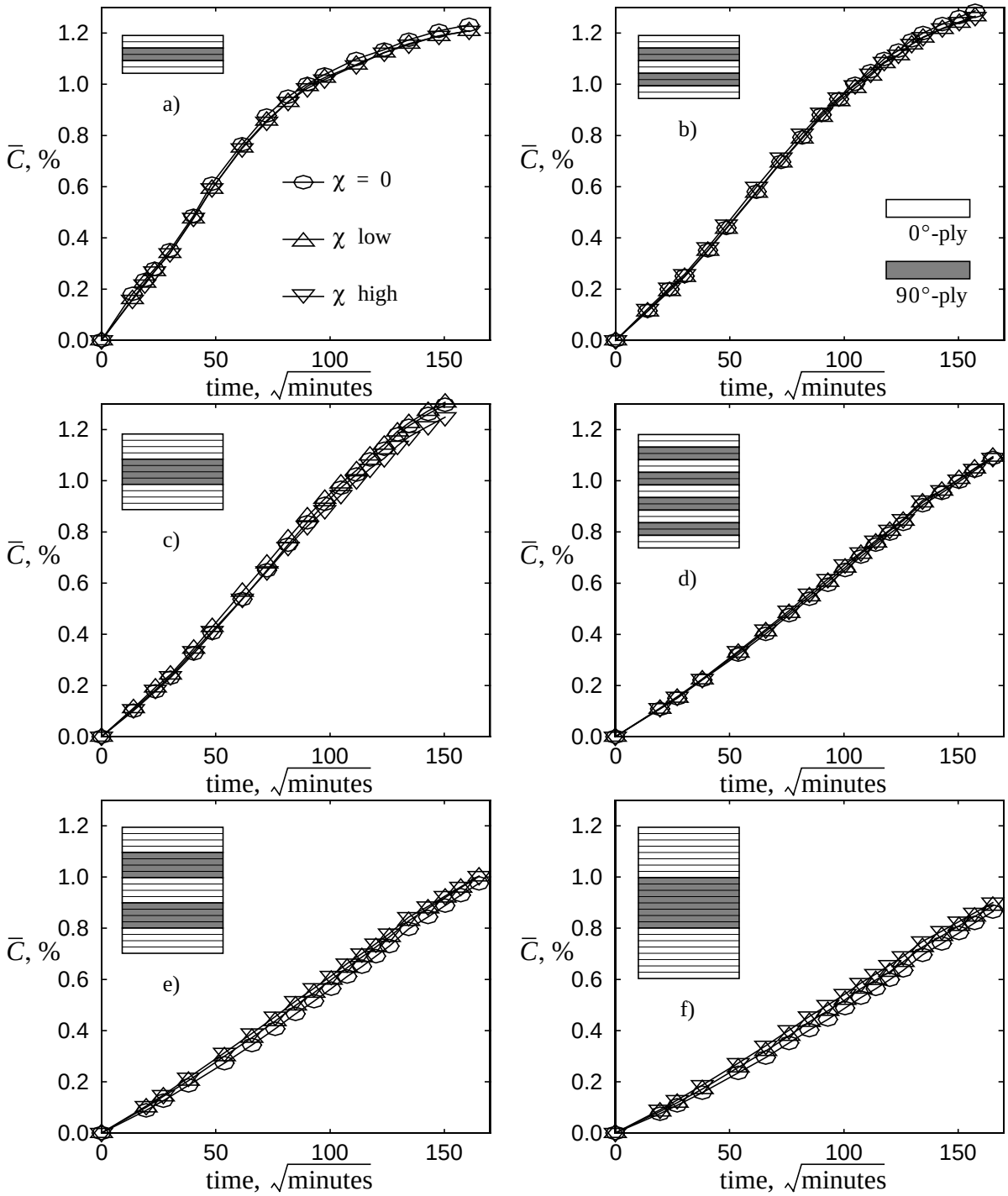

Fig. 1: a-f. Measured average moisture content $\bar{C}$ versus time for a) G1, b) G2, c) G3, d) G4, e) G5, f) G6 laminates according to Table 1. The symbols (⬭,△,▽) denote different levels of crack densities according to; ⬭ : $\chi = 0$, △ : $\chi = low$, ▽ : $\chi = high$.

The negligable effect of matrix cracking on moisture uptake rate is here suggested to depend on crack mouth closure due to moisture swelling early in the absorption process. If so, the surrounding moisture environment is prevented to reach the crack surfaces in the interior of the laminate and a slower moisture absorption results.

Crack closure test

To confirm the assumption that crack mouth closure is the reason for the obtained experimental results, an additional experiment was carried out. For this experiment only one sample of the laminate type G6 (see Table 1) was used. The preparation and the conditioning procedures for the sample were the same as in the moisture absorption experiment. The average crack density in the 90˚-ply of the sample, according to Eqns (1,2), was $\chi = 0.275$. During the experiment the sample weight and the crack mouth openings were simultaneously recorded. The measurement of the crack mouth opening was performed using an optical microscope and a LCD camera. From the obtained images the average crack mouth openings were estimated. Fig. 2 shows the crack mouth opening at the same part of the laminate at three different times. As can be seen in the figure, a very fast crack mouth closure is obtained. This behaviour is the same for all cracks, which confirms the suggestion that early crack mouth closure causes the absence of increase in moisture absorption rate.

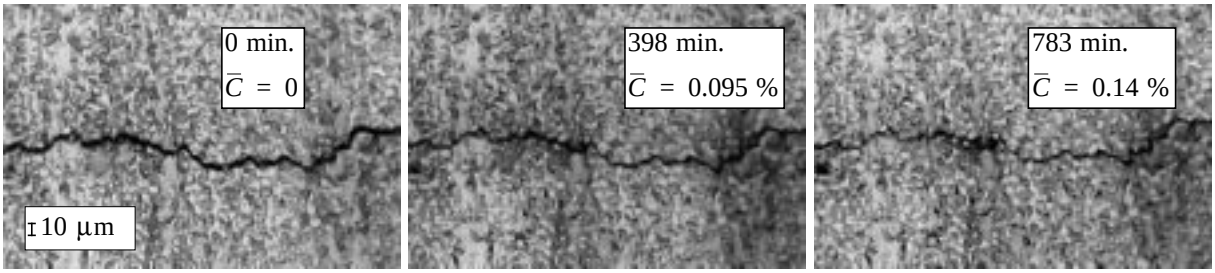

Fig. 2: Micrographs showing crack closure versus time for a part of a transverse crack in a G6 laminate with crack density $\chi = 0.275$.

THEORETICAL MODELS

Analytical model

For the theoretical models applied in this paper, Fickian material behaviour is assumed. For a composite laminate with the same material properties in each ply the transverse mass diffusion coefficient, D_T, through the thickness of the laminate is constant. If the laminate edges are moisture insulated and the free surfaces $x = 0$ and $x = L$ are exposed to a constant moisture environmental change C_0 for $t = 0$, then a one-dimensional moisture diffusion through the thickness is obtained. Provided that the laminate has a uniform moisture concentration C_I for $t = 0$, the solution is well known [14,15] and the average moisture concentration $\bar{C}(\tau)$ in the laminate can be written as

$$\bar{C}(\tau) = C_0 + (C_I - C_0) \sum_{n=1}^{\infty} \frac{8}{\upsilon_n^2} e^{-\upsilon_n^2 \tau}, \quad \tau \geq 0 \tag{3}$$

where

$$\tau = \frac{D_T t}{L^2} \qquad \upsilon_n = (2n-1)\pi \tag{4}$$

If the composite laminate contains matrix cracks that are in connection with the surrounding moisture environment, a faster moisture uptake is expected. This change in moisture uptake, for a cracked cross-ply laminate with matrix cracks in the 90˚-plies, is here estimated with the model given by Lundgren and Gudmundson [13]. For the case when the moisture environment instantly reach the crack surfaces in the interior of the laminate the model becomes

$$\bar{C}(\tau) = C_0 + (C_I - C_0)e^{-\bar{\mu}\tau} \sum_{n=1}^{\infty} \frac{8}{\upsilon_n^2} e^{-\upsilon_n^2 \tau}, \quad \tau \geq 0 \tag{5}$$

In Eqn (5) $\bar{\mu}$ is the so called moisture transfer coefficient. The moisture transfer coefficient $\bar{\mu}$ is related to the crack density, χ, according to [13] as:

$$\bar{\mu} = N^2 \cdot a\chi^b \tag{6}$$

In Eqn (6) a and b are constants and N is the total number of plies. From [13] the values a = 5.96 and b = 1.43 are obtained. Evidently, by inspection of the two Eqns (5) and (6), an increase of N or χ give a more rapid moisture absorption. If crack closure occur during the absorption process, then it is possible to estimate the moisture absorption after crack closure by analysing the process in two steps. The analysis can be carried out in the same way as presented in [13], and if we assume that the cracks will open and close several times the moisture absorption can be approximated as

$$\bar{C}(\tau) = C_0 + (C_I - C_0)e^{-\bar{\mu}\tau_0} \sum_{n=1}^{\infty} \frac{8}{\upsilon_n^2} e^{-\upsilon_n^2 \tau}, \quad \tau \geq 0 \tag{7}$$

where τ_0 is the total accumulated time for which the crack is open. With the analytical model the moisture absorption is independent on the sequence of the opening and closing of the cracks. Fig. 3a show the effect of crack closure at different times for a three ply laminate with a crack density χ = 0.275. If no crack closure occur a significant change in moisture uptake, compared to an uncracked laminate, is expected. This result does clearly not agree with the experimental results presented in Fig. 1. Fig. 3a shows also the effect of crack closure at different times. As can be seen in the figure the time when the crack closure occurs is very important for the moisture absorption behaviour. If the crack closure develops early (before $\bar{C}/C_0 > 0.1$), then it is hard to separate the moisture absorption behaviour of the cracked laminate from the absorption behaviour of the uncracked laminate. Hence, if the cracks in the experiment close before $\bar{C}/C_0 = 0.1$, which seems to be the case, the influence of the cracks on the moisture absorption is insignificant, according to the analytical model.

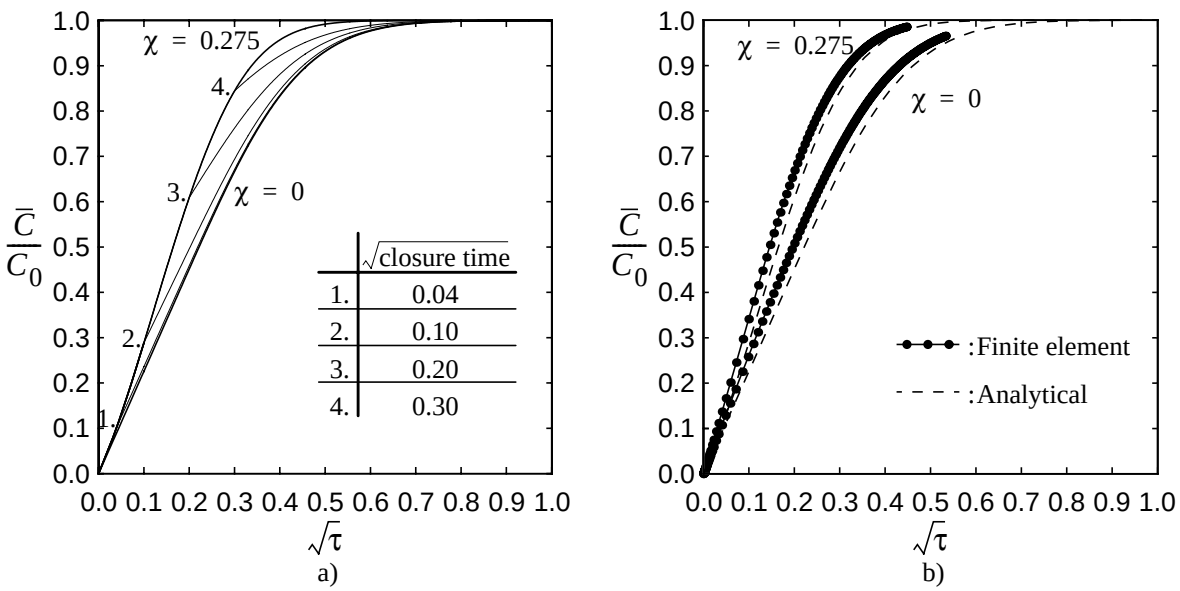

Fig. 3: a) Prediction of moisture absorption versus time for a cracked G6 laminate with a crack density of χ = 0.275. The various curves denote respectively different crack closure times. b) Finite element predictions (solid-dot lines) and analytical predictions (dashed lines) of moisture absorption for an uncracked and a cracked G6 laminate. The cracks are here assumed to remain open for all times.

Finite element calculations

To further verify if crack closure causes the absent increase in moisture absorption rate, FE-calculations were carried out with the commercial code ABAQUS-5.7 [16]. The FE-analysis was here performed as an uncoupled diffusion/stress analysis, where first a transient moisture diffusion analysis was executed with a following stress analysis. The material properties used in the calculations were a mixture of typical values for a unidirectional glass-fibre/epoxy laminate and experimentally obtained values for the investigated material system [17], see Table 3. The finite element model had the same geometry as the sample in the crack closure experiment with the exception that the finite element model was infinitely long with a perfectly periodic distribution of matrix cracks in the 90˚-ply, see Fig. 4a. Thus a model of a symmetric part of a periodic section was sufficient for the FE-analysis, see Fig. 4b.

Table 3: Material property values used in the finite element calculations. E_L, E_T, G_{LT} and ν_{LT} are experimentally obtained values ([17]) for the same material system. All other values are choosed as typical values. The moisture swelling strains are here denoted as ε_L^β, ε_T^β respectively.

Property:	$\frac{E_L}{GPa}$	$\frac{E_T}{GPa}$	$\frac{G_{LT}}{GPa}$	ν_{LT}	ν_{TT}
Value:	46 *	18 *	7.9 *	0.29 *	0.42

Property:	$\frac{\alpha_L}{K^{-1}}$	$\frac{\alpha_T}{10^6 \cdot K^{-1}}$	$\frac{\varepsilon_L^\beta}{(C/C_0)}$	$\frac{\varepsilon_T^\beta}{(C/C_0)}$	$\frac{D_L}{m^2/s}$	$\frac{D_T}{m^2/s}$
Value:	$6.72 \cdot 10^{-6}$	$29.3 \cdot 10^{-6}$	0	$2 \cdot 10^{-3}$	$3.66 \cdot 10^{-12}$	$6.82 \cdot 10^{-13}$

*****: Values from [17].

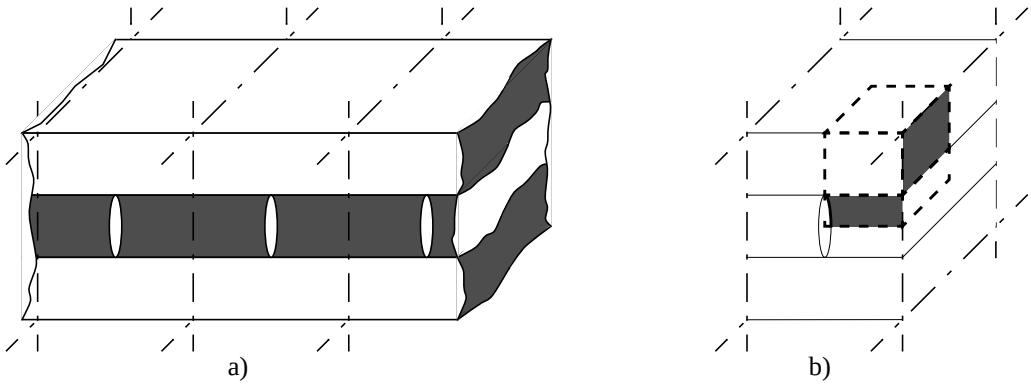

Fig. 4: a) Periodic structure investigated by finite element calculations. b) Periodic element with a corner that due to symmetry conditions is sufficient for finite element modeling.

In the model for the transient moisture diffusion analysis, mainly 20-node quadratic elements (DC3D20) were used. To avoid undesired oscillations in the solution, one layer of 8-node linear elements (DC3D8) was used at the outer surfaces that are exposed to the surrounding environment. The transition from 8-node elements to 20-node elements was performed with multi-point constraints. Since the moisture diffusion coefficient for air is much larger than for the composite material, $D_{air}/D_{composite} \approx 10^6$-$10^8$ ([8,9]), the moisture environment was assumed to reach all free surfaces instantly.

Fig. 3b shows that the change in moisture uptake for a finite width laminate with a crack density of χ = 0.275 compared to an uncracked laminate is significant if no crack closure is present. The change in moisture absorption rate for the cracked finite width laminate in Fig. 3b is of the same magnitude as obtained for the one-dimensional analytical model at the same crack density. Hence, the analytical model may be useful to judge the matrix crack influence on moisture uptake in finite width laminates in the case when no crack closure occur.

In the stress analysis, 20-node quadratic elements (C3D20) and rigid surface elements (IRS4) were used. The rigid surface elements were positioned at the crack surface and together with a rigid surface they were used to simulate possible crack closure. The transition between the two element types, C3D20 and IRS4, was achieved with multi-point constraints.

Thermal residual stresses from manufacturing was simulated with a uniform decrease in temperature of 50 ˚C to the whole model. The temperature decrease and the results from the transient moisture analysis give, via stress analysis, the crack opening as a function of time. By plotting the average crack opening as a function of the distance from the crack mouth at different times, it is possible to determine when and where the crack will close, see Fig. 5. It is observed that the thermal stresses at dry condition result in a finite crack opening, so that the moisture environment can reach the crack surface in the interior of the laminate. When the laminate starts to absorb moisture a very fast crack closure nearby the crack mouth is predicted. This crack closure will prevent the surrounding moisture environment to reach the interior of the laminate via the crack channels.

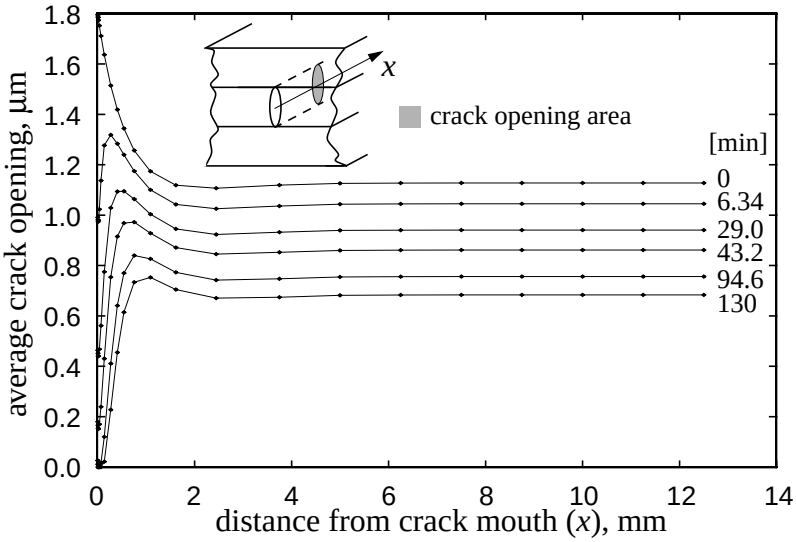

Fig. 5: Finite element calculations of average crack opening displacement versus distance from the free edge and time for a G6 laminate.

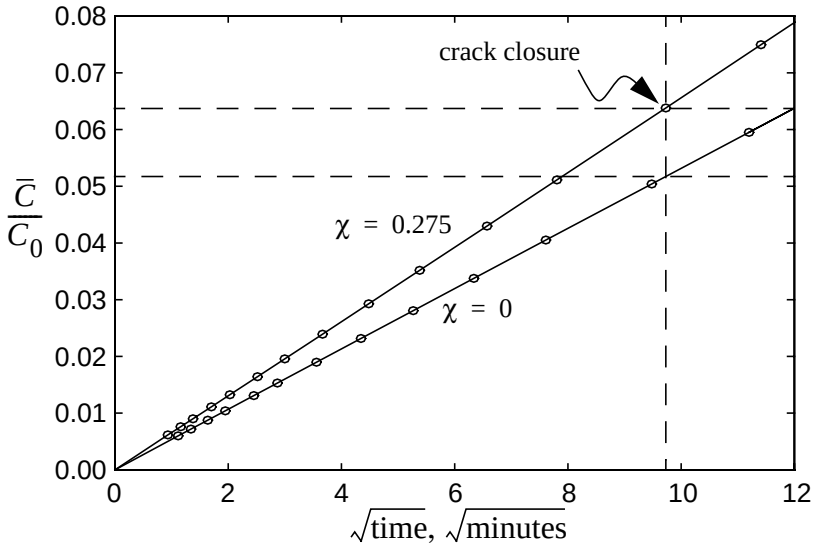

Fig. 6: Predictions of the difference in moisture absorption at crack closure time for an uncracked and a cracked G6 laminate using finite element calculations.

Due to the short time to obtain crack closure in the laminate, the absorbed amount of moisture before crack closure is small. The difference in the absorbed amount of moisture in the cracked and the uncracked laminate at the crack closing time is almost negligible, see Fig. 6, and there-

fore a negligible difference in moisture uptake is expected after crack closure. This behaviour in the FE-analysis verifies that the obtained experimental results are connected to crack closure nearby the crack mouth. The results also show that a nonlinear behaviour, due to crack closure, must be taken into consideration.

CONCLUSIONS AND DISCUSSION

In this paper moisture swelling in cracked composite laminates is showed to be important for the whole laminate moisture uptake process. Both finite element results and experimental results show that moisture swelling may cause crack closure early in the moisture absorption process. This imply that nonlinear effects connected to crack closure must be taken into consideration for the moisture absorption analysis as well as for the stress analysis. Whether or not crack closure occur when exposing a cracked laminate to a moisture environment strongly depends on the loading, the laminate type and the residual stresses from manufacturing. So, even if the results obtained in this study show an insignificant influence from the matrix cracks on the moisture absorption in a cracked laminate, this is generally not the case. For example, the work by Suri and Perreux [7] shows that a significant increase in the moisture absorption rate with increasing damage can be observed for a glass fibre/epoxy non-symmetric tubular laminate $[+55,-55]_3$ exposed to water.

Compared to finite element calculations, the model by Lundgren and Gudmundson [13] well estimates the crack influence on moisture absorption for a finite width laminate in the case of open cracks. For a laminate showing more complicated sequences of crack openings and crack closures, an analytic model based on [13] was proposed. This model is very simple to apply and an approximative estimate of moisture absorption can easily be obtained. To judge the accuracy of the proposed model however, further comparisons to experimental data are required.

REFERENCES

1 Wong, T. C. and Broutman, L. J., “Moisture diffusion in epoxy resins part 1. Non-Fickian sorption processes” *Polymer Engineering and Science*, Vol. 25, 1985, pp. 521-528.

2 Jackson, S. P. and Weitsman, Y. “Moisture effects and moisture induced damage in composites”, *Proceedings of the Fifth International Conference on Composite Materials*, Metallurgical Society, Warrendale, 1985, Harrigan W. C., Ed., pp. 1435-1452.

3 Shen, C-. H. and Springer, G. S., “Environmental effects in the elastic moduli of composite material”, *Environmental Effects on Composite Materials*, Springer G. S., Ed., Technomic Publishing Company, Inc., Westport, CT, 1981, pp. 94-108.

4 Adolfsson, E and Gudmundson P., “Thermoelastic properties in combined bending and extension of thin composite laminates with transverse matrix cracks”, *International Journal of Solids and Structures*, Vol 34, 1997, pp. 2035-2060.

5 Gillat, O. and Broutman, L. J. “Effect of an external stress on moisture diffusion and degradation in a graphite-reinforced epoxy laminate”, *Advanced Composite Materials-Environmental Effects, (ASTM STP 658)*, Vinson J. R., Ed., American Society for testing and Materials, 1978, pp. 61-83.

6 Collings, T. A. and Stone, D. E. W., “Hygrothermal effects in CFC laminates: Damaging effects of temperature, moisture and thermal spiking”, *Composite Structures*, Vol. 3, 1985, pp. 341-378.

7 Suri, C. and Perreux, D. “The effect of mechanical damage in a glass fibre/epoxy composite on the absorption rate”, *Composites Engineering*, Vol. 5, 1995, pp. 415-424.

8 *Landolt-Börnstein, Zahlenwerte und funktionen, 6 auflage, 5 teil, bandteil a, Transportphänomene I*, Schäfer K., Ed., Springer verlag, 1969.

9 Loos, A. C. and Springer, G. S., “Environmental effects on composite materials”, *Environmental Effects on Composite Materials*, Springer G. S., Ed., Technomic Publishing Company, Inc., Westport, CT, 1981, pp. 34-50.

10 Shen, C. H. and Springer, G. S., “Moisture Absorption and Desorption of Composite Materials”, *Journal of Composite Materials*, Vol. 10, 1976, pp. 2-20.

11 Carter, H. G. and Kibler, K. G., “Langmuir-type model for anomalous moisture diffusion in composite resins”, *Journal of Composite Materials*, Vol. 12, 1978, pp. 118-131.

12 Weitsman, Y. (1987). Coupled damage and moisture-transport in fiber-reinforced, polymeric composites. *International Journal of Solids Structures*, Vol. 23, 1987, pp. 1003-1025.

13 Lundgren, J. -E. and Gudmundson, P., “A model for moisture absorption in cross-ply composite laminates with matrix cracks”, *Journal of Composite Materials*, Vol. 32, 1998, pp. 2226-2253.

14 Jost, W., *Diffusion in Solids, Liquids, Gases*, Academic Press, New York, 1952.

15 Crank, J., *The mathematical theory of diffusion, 2. ed.*, Oxford University Press, Oxford, 1975.

16 *ABAQUS User’s manual Version 5.7*, Hibbit, Karlsson & Sorensen, Inc. , Pawtucket, Rhode Island, 1997.

17 Adolfsson, E. and Gudmundson, P., “Matrix crack initiation and progression in composite laminates subjected to bending and extension”, *Report 195*, Department of Solid Mechanics, Royal Institute of Technology, Stockholm, Sweden, 1996, To appear in *International Journal of Solids Structures.*