The Weibull Moduli of Si-Zr-C-O Fiber with Diameter Variation Along the Gauge Length.

T. Morimoto [1], R. M. Aoki [2]

[1] *Aeroengines Division, National Aerospace Laboratory (NAL)*
Jindaiji Higashi-machi 7-44-1, Chofu, Tokyo, 182-8522 Japan
[2] *Institute for Structures and Design, German Aerospace Center (DLR)*
Pfaffenwaldring 38-40, Stuttgart, 70569 Germany

SUMMARY: Si-Zr-C-O ceramic fibers were evaluated for deriving the Weibull parameters of high accuracy. The approach in this study couples detailed measurements of the diameter along the gauge length with tensile tests. The distribution of critical defects is assumed in the two-parameter single-modal Weibull model to be homogeneous throughout the volume. In the case of ceramic fibers, the term of volume is usually replaced with gauge length assuming the uniformity of the diameter. However the diameter measurements revealed very large variation along the gauge length of each fiber. This affects the reliability of the Weibull parameters, if the parameters are correlated with the gauge length and not with the volume. Therefore, tensile samples of equal volume were made from the sections with negligible variation in the diameter. Then the Weibull moduli were calculated for the two-parameter single-modal case with the tensile results. The obtained results show that the two-parameter single-modal Weibull distribution can successfully characterize the strength of Si-Zr-C-O fibers.

KEYWORDS: Weibull Modulus, diameter variation, volume effect, Si-Zr-C-O fiber, tensile strength

INTRODUCTION

The Weibull model is usually applied for the statistical distribution of filament strength at the monofilament level [1, 2]. It has been discussed in the literature that the measured Weibull moduli of a single gauge length accurately predicts either the gauge length or the diameter dependence of ceramic fiber strength [3, 4]. For ceramic fibers it is frequently regarded in the Weibull model, that critical defects are homogeneously distributed throughout the length assuming the diameter is consistent along the gauge. The assumption is adequate if each fiber has negligible variation in the diameter.

Some commercial ceramic fibers, however exhibit a range of the diameters [5]. As a result fiber strength characterizations have so far been questioned by the nature of commercial fibers with large diameter variation. Although the strength of ceramic or carbon fibers have been

studied extensively considering the fiber diameter [6, 7], no thorough study has been reported on the effects of the diameter variation along the gauge length upon strength. Therefore, extensive study is essential for the characterization of commercial fibers with diameter variation along the gauge length.

In this study, intensive measurements have been conducted on the diameter of Si-Zr-C-O ceramic fibers (Tyranno ZMI, UBE Industry Co.). Variation in the diameter was measured with an accuracy of 0.1 μm, in 1mm steps along the gauge length of each fiber. After the measurements, tensile samples were prepared under the consistent volume condition of 1.7 x 10^{-12} m^3. The samples were prepared from the sections with negligible variation in the diameter to avoid the stress variation by the diameter change. Using the test results, the Weibull moduli were calculated for the two-parameter single-modal case and correlated with the effects of fiber volume. For the demonstration, samples were tensile tested for the case of 100 mm gauge length with various volumes. The sample volumes were calculated using the diameter measurements results prior to tensile testing. It will be shown that the single-modal Weibull distribution is accurate in characterizing the strength of Si-Zr-C-O fibers with various volumes.

MATERIAL AND EXPERIMENTAL PROCEDURE

Material

The fiber used in this study is ZMI-S1C08PX (Tyranno ZMI, UBE Industry Co.). The fiber has the following characteristics according to the quality inspection data sheet by the supplier: diameter 13 μm, tensile strength 2.42 GPa, density 2.49 g/cm^3 and an oxygen content of 8.7 wt%.

Diameter measurements

The diameters of sample fibers were measured with a laser scan micrometer with an accurancy of 0.1 μm reliability (Mitutoyo LSM-500).

The fiber to be measured was mounted on a holder as depicted in figure 1. The prepared sample was then attached to the uni-directional stage with 1 mm step movements. Figure 2 shows the basic layout of the measurement setup.

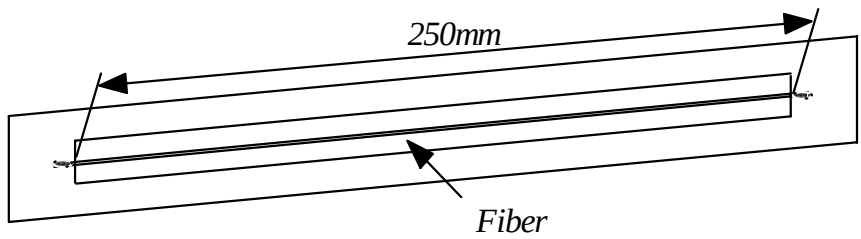

Fig. 1: Sample preparation

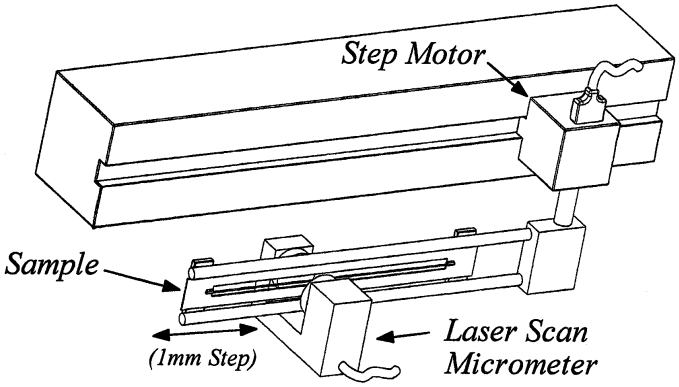

Fig. 2: Measurement setup

Fiber cross section shape

A fiber diameter is measured as a projection of the laser beam. The measured value is reliable as a diameter when the fiber has a circular cross-section. Therefore fiber cross-section shape was analyzed with a scanning electron microscope (SEM: Philips 525M).

As the cross-section of the fibers were expected to be close to round, the shape was evaluated as depicted in figure 3. Two diameters, ϕ_{max} and ϕ_{min} were given as the minimum diameter of the circumscribing cross section and the maximum diameter inscribing the cross section, respectively. Then the aspect ratio *AR* and the mean diameter of a cross section ϕ_{mean} were defined as follows : $AR = \phi_{min} / \phi_{max}$ and $\phi_{mean} = (\phi_{max} + \phi_{min}) / 2$.

Figure 4 shows the results of the analyses on 100 cross sections. As the mean value of aspect ratios *AR* were close to 1, Si-Zr-C-O fibers were regarded to have circular cross sections. Therefore, values measured with the laser scan micrometer were accepted as the fiber diameter.

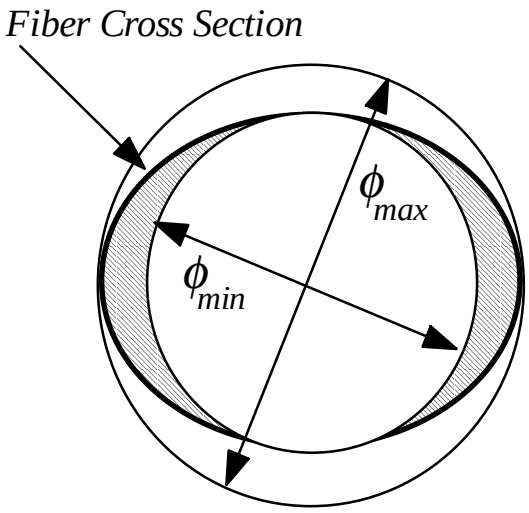

Fig. 3: Fiber cross section

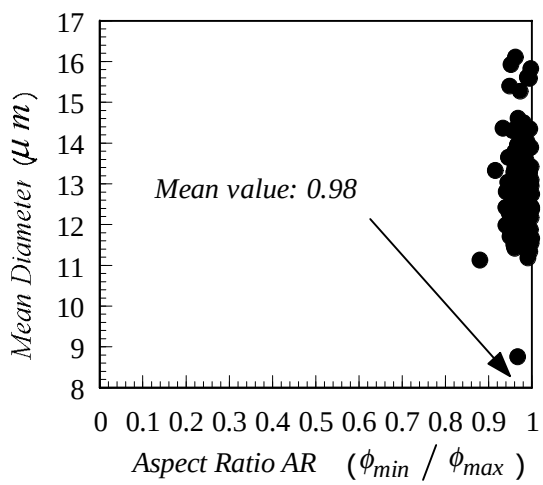

Fig. 4: Cross section shape

Tensile tests

Sample fibers were tensile tested with a Zwick 1484 tensile test machine under a constant crosshead speed condition of 1 mm/min. The two types of tensile samples were prepared as shown in figure 5.

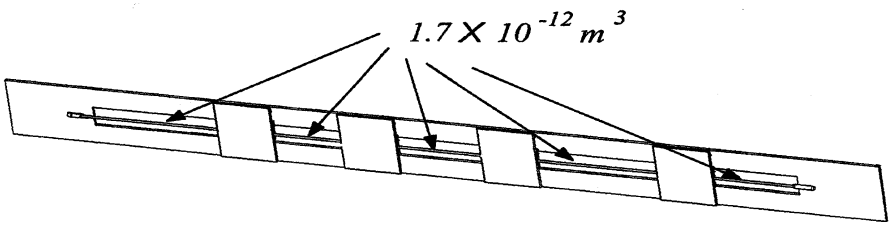

(a) Consistent volume sample

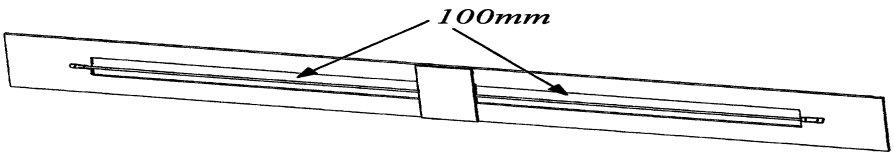

(b) Consistent gauge length sample

Fig. 5: Tensile test samples.

Figure 5 (a) shows samples with the consistent volume of 1.7 x 10^{-12} m^3 for deriving Weibull moduli. Figure 5 (b) shows samples with the consistent gauge length of 100 mm for examining whether the measured Weibull moduli accurately predict the strength. After the test was set up and prior to tensile testing, the paper sample holders were cut away, as depicted in figure 6.

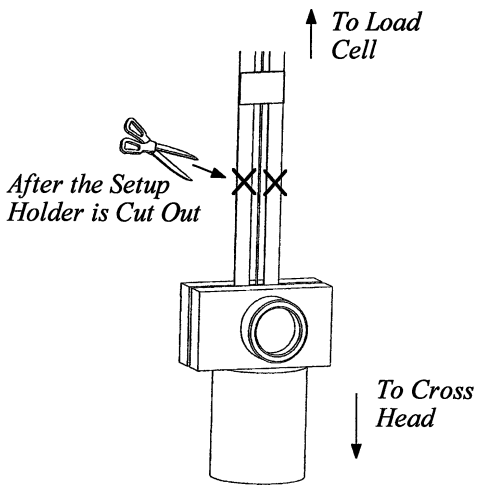

Fig. 6: Tensile test setup

RESULTS AND DISCUSSION

Fiber shapes

In figure 7 an example of diameter measurement along 250 mm (a) and the schematic shape (b) is given. As seen in the figures, individual fiber diameters vary significantly along the gauge length.

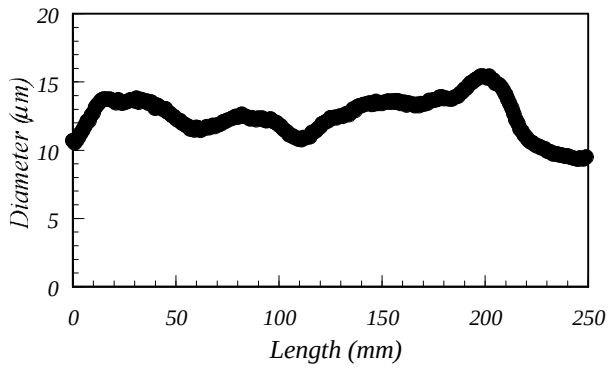

(a) A shape of fiber

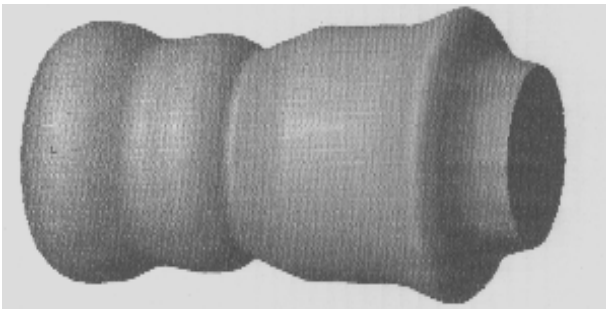

(b) The schematic shape

Fig. 7: Fiber shape

Figure 8 shows the distribution of fiber diameter ratios $\phi_{maxG.L.}/\phi_{minG.L.}$, where $\phi_{maxG.L.}$ is the maximum and $\phi_{minG.L.}$ is the minimum diameter along the 250 mm gauge length. The $\phi_{maxG.L.}/\phi_{minG.L.}$ ranges from approximately 1.2 to 1.9, showing that the uniformity assumption of the diameter is not always applicable for the Weibull analysis. Moreover, a diameter measurement gives a larger error in the Weibull moduli when it is done at a point along the fiber gauge. Therefore diameter measurements along the fiber gauge are essential for deriving Weibull moduli of high accuracy.

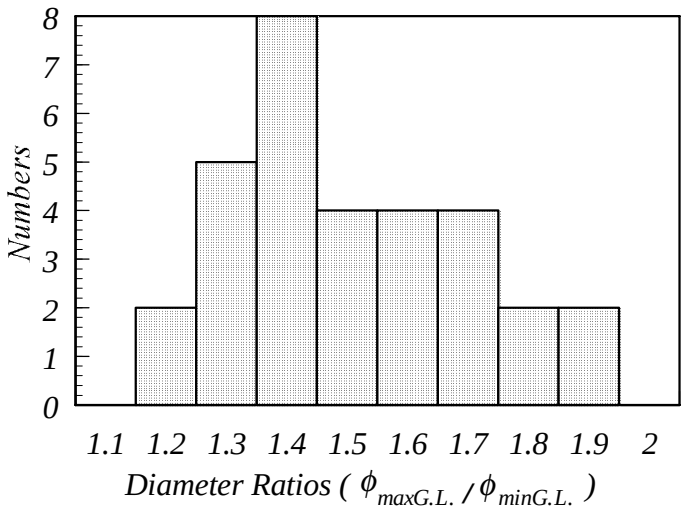

Fig. 8: Fiber diameter ratios

Weibull parameters

Two-parameter single-modal Weibull distribution is considered in the form:

$$P = 1 - \exp\left[-\frac{V}{V_0} \cdot \left(\frac{\sigma}{\sigma_S} \right)^m \right] \tag{1}$$

where P is the probability of a fiber having a strength less than or equal to σ and V_0 is an imaginary unit of volume. In the following approach V_0 is 1.7 x 10^{-12} m^3 for the tensile tests. The Weibull shape and scale parameters m and σ_s , respectively, are derived through the tests.

Tensile specimens were prepared with fiber sections of less variance in the diameter considering the results of the diameter measurements. In order to avoid error due to the stress variation along the gauge length, the diameter ratio along the gauge was conditioned for the sample preparation as $\phi_{maxG.L.} / \phi_{minG.L.}$ smaller than or equal to 1.1. The gauge lengths ranged from 14 mm to 23 mm as each sample was prepared with the volume 1.7 x 10^{-12} m^3.

The cumulative distribution of the tests and the data fitting for deriving the Weibull parameters is shown in figure 9 (a) and (b), respectively. The results yield to the shape parameter m = 5.2 and the scale parameter σ_s = 3.8 GPa.

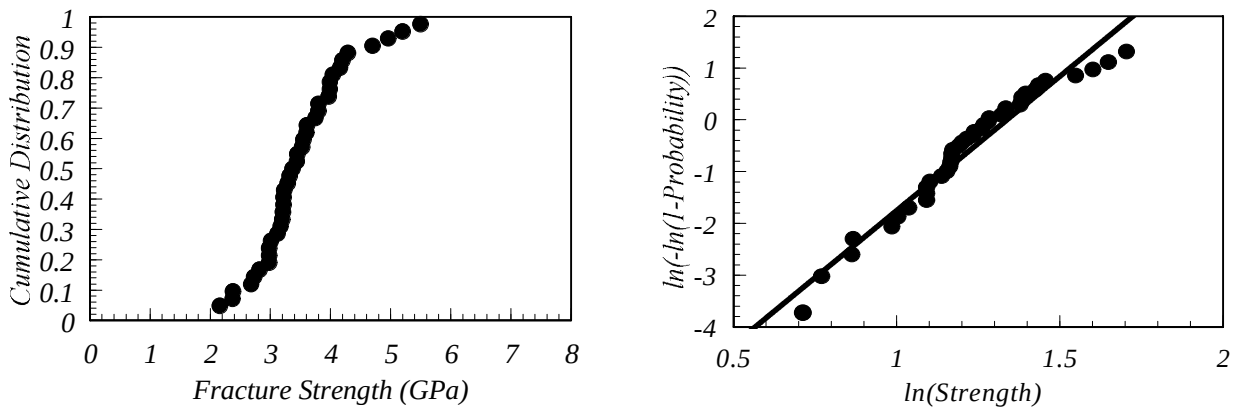

(a) Cumulative distribution of the tests (b) Data fitting

Fig. 9: Test results

Weibull model and cumulative fracture probability

Results obtained above were verified through the correlation between the probability by the Weibull model and the cumulative fracture probability from tensile test results.

After measuring the diameter of the gauge length in 1mm step sections, 30 data sets of fibers with a 100 mm gauge length were tensile tested. The fracture probability of i'th 1 mm section, $P_{i'th\ section}$, was calculated with the parameters of 1.7 x $10^{-12}$$m^3$ volume fibers as

$$P_{i'th\ section} = 1 - \exp\left[-\frac{V_{i'th\ section}}{1.7} \cdot \left(\frac{L_{fracture} / \left(\frac{\pi}{4} \cdot \phi_{CS}^2 \right)}{3.8} \right)^{5.2} \right] \quad , \tag{2}$$

where $V_{i'th\ section}$ is the volume of i'th section in 10^{-12} m^3, ϕ_{CS} is the cross section diameter in μm and $L_{fracture}$ is the fracture load in GPa. The volume of i'th section $V_{i'th\ section}$ was calculated assuming a cylinder with diameter ϕ_{CS} and the height 1 mm.

Then the fracture probability of the total fiber was calculated as

$$P_{total} = 1 - \prod_i \left(1 - P_{i'th\ section} \right) \quad . \tag{3}$$

Cumulative fracture probability P_{cum} of a fiber with calculated fracture probability P_{total} was approximated by

$$P_{cum} \approx \frac{n_j}{1+n} \quad , \tag{4}$$

where n_j is the number of filaments fractured at or below the probability by the equation (3) and n is the total number of samples tested. In this case n = 30.

Figure 10 shows the results as P_{cum} is close to P_{total} with the correlation factor 0.99. The correlation factor is close to 1 showing that the fracture probability of Si-Zr-C-O fiber was successfully predicted with the two-parameter single-modal Weibull model.

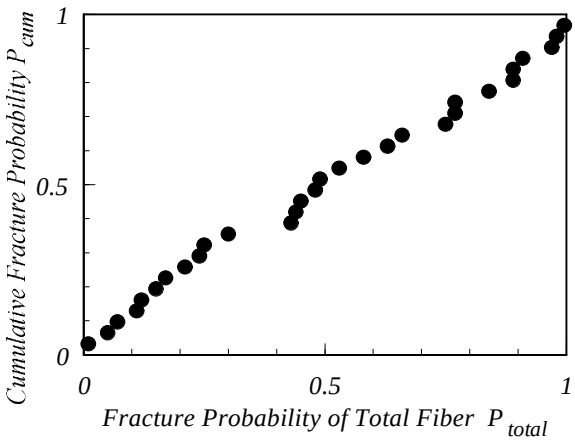

Fig. 10: Fracture probability

CONCLUSIONS

Each Si-Zr-C-O fiber has shown large variation in the diameter along the gauge length. Therefore the statistics of the fracture strength was studied with an approach coupling detailed measurements of the diameter along the gauge length with the tensile tests.

The two-parameter single-modal Weibull distribution has shown excellent consistency in characterizing the strength of Si-Zr-C-O fibers with varying diameters. The correlation of Weibull parameters with fiber volume is found to be adequate for the characterization, and is found to predict the fracture probability with the correlation factor close to 1.

The results indicate that Si-Zr-C-O fiber is able to be applied for engineering structures with a standard based on the two-parameter single-modal Weibull distribution.

ACKNOWLEDGEMENTS

The authors wish to thank the Japan's Science and Technology Corporation (JST) for financial assistance from the JST "Overseas Research Fellowship" program.

Additional thanks go to Mr. Kraft for his patient help with the tensile tests.

REFERENCES

1. Coleman, B.D., ″On the Strength of Classical Fibers and Fibre Bundles. ″ *Journal of the Mechanics and Physics of Solid*, 1958. **7**: pp.60-70.
2. Zwaag, S., ″The Concept of Filament Strength and the Weibull Modulus . ″ *Journal of Testing and Evaluation*, 1989: pp.292-298.
3. Wilson, D.M., ″Statistical Tensile Strength of Nextel™ 610 and Nextel™ 720 Fibers. ″ *Journal of Materials Science*, 1997. **32**: pp.2535-2542.
4. Yuntian T. Zhu, et. al., ″Analysis of Size Dependence of Ceramic Fiber and Whisker Strength.″ *Journal of American Ceramic Society*, 1997. **80** (6): pp.1447-1452.
5. T. Morimoto, et.al., ″A New Method for Measuring Diameter Distribution Along Ceramic Fiber. ″ *Ceramic Engineering and Science Proceedings*, 1998. **19** (3).
6. Tietz, et. al., ″Improved Accuracy of the Laser Diffraction Technique for Diameter Measurement of Small Fibers . ″ *Journal of Materials Science*, 1990. **25**: pp. 4694-4698.
7. H. Fukuda, et. al., ″Strength Distribution of Monofilaments Used for Advanced Composites. ″ *Proceedings of the Ninth International Conference on Composite Materials (ICCM / 9)*, 1993. **6**: pp. 687-694.