ID 1165

A Study on the performance test and manufacture of the dielectric sensor for the cure monitoring of the high temperature composites

I. Y. Kim[1], J. H. Choi[2] and D. G. Lee[3]

[1] *LACOMTECH Co., Ltd.*
[2] *Research Center for Aircraft Parts Technology, School of Transport Vehicle Eng., Gyeongsang National Univ.*
[3] *Dept. of Mechanical Eng., Korea Advanced Institute of Science and Technology*

SUMMARY : As fiber reinforced composite materials are widely used in aircraft, space structures and robot arms, the on-line cure monitoring during the cure process of the composite materials has become an important research area for the better quality and productivity.

In this paper, the LACOMTECH dielectric circuit composed of exclusive-or-gate and Wheatstone bridge for measuring the dissipation factor during cure of thermosetting resin matrix composite materials was designed and manufactured. Also, the dielectric sensor for the cure monitoring of high temperature composites was developed and tested. The residual thermal stresses of the dielectric sensor during cure were analyzed by the finite element method and its dielectric characteristics at high temperature were evaluated. The on-line cure monitoring of the BMI (Bismaleimide) resin was performed using the developed Wheatstone bridge type circuit and the high-temperature dielectric sensor.

KEY WORDS : Dielectric sensor, Cure monitoring, Dissipation factor, BMI(Bismaleimide)

INTRODUCTION

Thermosetting resin matrix composite materials have been used in aircraft structures and space structures as well as commercial and leisure products such as automotive panels, fishing rods and tennis rackets. Since the mechanical properties of thermosetting resin matrix composite materials are dependent on the cure history, the cure monitoring and control are important for the quality control and improvement of mechanical properties of thermosetting resin matrix composite materials. The control of ambient pressure and temperature by cure monitoring can yield a satisfactory product in the shortest process time.

There are several cure monitoring methods, such as differential scanning calorimetry (DSC), dynamic mechanical analysis (DMA), infrared spectroscopy (IRS), optical technique and dielectrometry. From these methods, dielectrometry is known to be the most promising technique to monitor the cure of thermosetting resin matrix composite materials because it can monitor continuously the cure chemistry of the resin throughout the process going from monomeric liquid to cross-linked solid [1-3].

In this paper, the dielectric circuit of the Wheatstone bridge type for measuring the dissipation factor during cure of thermosetting resin matrix composite materials was designed

and manufactured. Also, the dielectric sensor for the cure monitoring of high temperature composites was developed and tested. The residual thermal stresses of the dielectric sensor during cure were analyzed by the finite element method and its dielectric characteristics at high temperature were evaluated. The on-line cure monitoring of the BMI (Bismaleimide) resin was performed using the developed LACOMTECH dielectric circuit composed of exclusive-or-gate and Wheatstone bridge and the high-temperature dielectric sensor.

DESIGN AND TEST OF THE DIELECTRIC CIRCUITS

♦ Direct type circuit

The dissipation factor D_f is usually used for the cure monitoring of polymer matrix composites. The dissipation factor D_f can be represented by the parallel arrangement of the equivalent capacitance C_m and resistance R_m expressed as follows [4].

$$D_f = \frac{1}{R_m C_m \omega} \tag{1}$$

One of the commonest circuits for measuring the capacitance C_m and resistance R_m is the direct type circuit suggested by Km and Lee [4]. Figure 1 shows the direct type circuit for measuring a capacitance C_m and resistance R_m of thermosetting resin. In direct type circuit of Figure 1, the dissipation factor D_f can be calculated by the circuit theory after measuring the ratio $|V_m/V_i|$ and the phase difference φ between the applied voltage V_i and the voltage V_m across the composite materials.

$$D_f = \frac{|V_m/V_i| - \cos\varphi}{\sin\varphi} \tag{2}$$

From equation (2), the dissipation factor D_f can be calculated by measuring voltage ratio $|V_m/V_i|$ and phase difference φ. However, since the measuring range of a resistance R_m of thermosetting resin was from 0 to •, the measuring accuracy can be relatively low. The resistance R_m of thermosetting resin was generally known to be order of M•. The Wheatstone bridge type circuit which can improve the measuring accuracy of the resistance by reducing the measuring range of the resistance from M• to • was suggested and tested.

♦ Wheatstone bridge type circuit

The Wheatstone bridge type circuit for improving the measuring accuracy was designed as shown in Figure 2 [5]. The Wheatstone bridge type circuits are classified into the balanced

Wheatstone bridge type and unbalanced Wheatstone bridge type. In this study, the unbalanced Wheatstone bridge type was selected to measure the capacitance C_m and resistance R_m.

If the alternating voltage V_i with angular frequency ω is applied to the circuit, the impedance Z_2 across R_2, impedance Z_3 across R_3, impedance Z_4 across R_4 and impedance Z_m across the composite material are expressed as follows.

$$Z_2 = R_2, \quad Z_3 = R_3, \quad Z_4 = R_4, \quad Z_m = \frac{R_m}{1 + j\omega C_m R_m} \tag{3}$$

The voltage V_m across the composite material is calculated as follows.

$$V_m = \left[\frac{Z_m}{Z_m + Z_2} - \frac{Z_3}{Z_3 + Z_4} \right] V_i \qquad \text{Where,} \qquad V_m = E_1 - E_2 \tag{4}$$

The voltage ratio V_r and phase difference φ are expressed as follows.

$$V_r = \left| \frac{V_m}{V_i} \right| = -\frac{b}{c \sin\varphi} \tag{5}$$

$$\tan\varphi = -\frac{b}{a} \tag{6}$$

If $R = R_2 = R_4$, the capacitance C_m and resistance R_m of thermosetting resin can be calculated as follows.

$$R_m = \frac{-B - \sqrt{D}}{2A} \tag{7}$$

$$C_m = \frac{-R_m + \sqrt{R_m^2 - 4V_r^2 (R + R_m)^2 SIN^2\varphi}}{2V_r R R_m \omega SIN\varphi} \tag{8}$$

Where,

$D = B^2 - 4AC$

$$A = 2V_r^2 R_3^2 \sin^2\varphi + 2V_r^2 R^2 \sin^2\varphi + 4V_r^2 RR_3 \sin^2\varphi + 2V_r^2 (R+R_3)^2 \cos^2\varphi + 2V_r R_3^2 \cos\varphi - 2V_r R^2 \cos\varphi - 2RR_3$$

$$B = 4V_r^2 RR_3^2 \sin^2\varphi + 8V_r^2 R^2 R_3 \sin^2\varphi + 4V_r^2 R^3 \sin^2\varphi + 4V_r^2 R(R+R_3)^2 \cos^2\varphi + 4V_r R^2 R_3 \cos\varphi + 6V_r RR_3^2 \cos\varphi - 2V_r R^3 \cos\varphi + 2RR_3^2 - 2R^2 R_3$$

$$C = 2V_r^2 R^2 R_3^2 \sin^2\varphi + 2V_r^2 R^4 \sin^2\varphi + 4V_r^2 R^3 R_3 \sin^2\varphi + 2V_r^2 R^2 (R+R_3)^2 \cos^2\varphi + 4V_r R^2 R_3 (R+R_3)\cos\varphi + 2R^2 R_3^2$$

If the voltage ratio V_r and phase difference φ are measured, the dissipation factor D_f can be calculated by Equations (7), (8) and (1). Figure 3 shows the schematic diagram of the Wheatstone bridge type circuit for measuring the voltage ratio V_r and phase difference φ. The optimal applied angular frequency ω and input voltage V_i for high accuracy should be determined though experiments. In the direct type circuit, the input voltage of 1V and frequency of 1kHz were suggested by Kim [4]. In the Wheatstone bridge type circuit of this study, the applied voltage and the applied frequency were fixed to be 3V and 400Hz, respectively. Also, the values of resistance R and R_3 were fixed to be 10 MΩ and 1 MΩ, respectively.

In order to compare the accuracies of these two types of circuits, the resistances and capacitances of known electric resistors and capacitors were measured by the developed circuits. Figure 4 shows the errors of the resistance in the direct type circuit and the Wheatstone bridge type circuit. The errors of resistance in the direct type circuit and Wheatstone bridge type circuit were ±1% and ±0.5%, respectively as shown in Figure 4. Also, the errors of capacitance in the direct type circuit and Wheatstone bridge type circuit were ±2% and ±1%, respectively as shown in Figure 5. From the tests, it was concluded that the accuracy of the Wheatstone bridge type circuit was better than that of the direct type circuit.

DEVELOPMENT OF THE HIGH TEMPERATURE DIELECTRIC SENSOR

♦Low temperature dielectric sensor

Figure 6 shows the low temperature dielectric sensor of comb type pattern [6]. Substrates of the dielectric sensors are made of polymer materials like epoxy. The service temperature of the dielectric sensor is limited by the glass transition temperature of the substrate because the dielectric properties of the substrate vary at the glass transition temperature. The variation of the dissipation factor of the dielectric sensor itself was measured under high temperature. Figure 7 shows the variation of the dissipation factor of the dielectric sensor only when the ambient temperature is 220•. As shown in Figure 7, it was found that the dissipation factor of the dielectric sensor whose substrate made of epoxy began to vary after 8 minutes and its substrate was carbonized after 25 minutes.

From the tests, it was concluded that the dielectric sensors whose substrate was made of epoxy could not be used in the cure monitoring of the high temperature composites.

♦ **High temperature dielectric sensor**

In this study, dielectric sensors for high temperature cure monitoring were developed and tested. The dielectric sensors were composed of copper pattern and substrate. The copper pattern plays the role of the electrode to measure the dissipation factor and the substrate plays the role of the fixture to support the copper pattern. For the high temperature application, the substrates of dielectric sensors should be stable under the high temperature. Also, they should have high electric resistance and low coefficient of thermal expansion. Some of these properties but not all are possessed by high temperature thermosetting resin, glass, and ceramic materials.

In this study, glass was selected for the substrate material of the dielectric sensor because of easy handling and low cost. And the copper paste was composed of epoxy and copper powder was pasted on the glass substrate. The copper paste for the experiment was ACP-060 made by ASAHI INC whose material properties are shown in Table 1. Figure 8 shows the mold for casting the sensor pattern. The mold was manufactured by the electro-discharging wire cutting machine. After spraying the mold-release into the mold, the copper paste was inserted into the mold and cured at 120• for 2 hours. For the post cure, the manufactured sensor was cured again at 150• for 30 minutes. After demolding the dielectric sensor from the mold, the surfaces of the sensor were ground for good surface quality and then cleaned by Acetone.

If the height of the sensor pattern is increrased, the residual thermal stresses in the dielectric sensor are increased though its sensitivity can be improved. Therefore, the residual thermal stresses of the dielectric sensor with respect to the height of the sensor pattern were analyzed by the finite element analysis using a commercial software ANSYS 5.5. The 3-D isoparametric elements were used [7] and the temperature difference during the cure monitoring was set to be 180•.

Figure 9 shows the residual thermal stresses of the glass substrate and the sensor pattern of high temperature dielectric sensor w.r.t. the height of the sensor pattern. The residual thermal stresses of the glass substrate and the sensor pattern were converted into the Von-Mises equivalent stress and the shear stress component, respectively. As shows in Figure 9, the sensor pattern will not be fractured since the thermal stress of the sensor pattern is smaller than the shear strength of copper paste. However, the glass substrate may be fractured since the thermal stress of the glass substrate become 35 MPa which is the strength of glass substrate when the height of the sensor pattern is 250 μm .

In order to verify the results of finite element analysis, the BMI resins were cured on the dielectric sensors which have the several heights of the sensor pattern. The curing temperature of BMI resin was 220•. From the tests, it was found that the dielectric sensors were fractured when the heights of the sensor pattern were larger than 200 μm . Figure 10 shows the photograph of the fractured dielectric sensor after cure when the height of the sensor pattern was 250 μm . From the analysis and experiments, it was concluded that the height of the sensor pattern without fracture of the dielectric sensor should be smaller than 200 μm .

The surface of the dielectric sensor was coated with chrome by electroplating for the electrically stabilized surface of the sensor pattern [8] to prevent the surface of the dielectric sensor from being electrically unstable since the sensor pattern is made of copper paste.

Figure 11 shows the electroplated high temperature dielectric sensor.

♦ **Performance test of the high temperature dielectric sensor**

In order to evaluate the performance of the high temperature dielectric sensor during cure of high temperature composites, the cure monitoring system as shown in Figure 12 was constructed. Figure 13 shows the variation of the dissipation factor of the high temperature dielectric sensor only when the holding temperature is 220•. As shown in Figure 13, the dissipation factor of the high temperature dielectric sensor had a very small change and remained at nearly zero.

To investigate the applicability of the high temperature dielectric sensor, cure monitoring during the cure of BMI resin was performed. The maximum curing temperature of the BMI resin was 200• and the heating rate of the BMI resin was 10•/min. Figure 14 shows the cure monitoring of the BMI resin with the developed high temperature dielectric sensor. As shown in Figure 14, the dissipation factor of the BMI resin was maximum after 23 minutes. Also, it was found that the cure of the BMI resin was completed after 30 minutes since the dissipation factor of the BMI resin maintained a constant value. From the tests, it was concluded that the developed high temperature dielectric sensor could be applied to the cure monitoring of the high temperature composites.

CONCLUSION

In this paper, the LACOMTECH dielectrometry circuit composed of Wheatstone bridge type circuit and exclusive-or-gate and the high temperature dielectric sensor made of glass for the cure monitoring of the high temperature composites were designed and manufactured. From the analysis and experiments, the following conclusions were made:

1. The error of the dielectric circuit in measuring the dissipation factor of the BMI resin was less than 1% .
2. The height of the sensor pattern without fracture of the dielectric sensor due to thermal residual stress should be smaller than 200 μm .
3. During cure monitoring of the BMI resin, the dissipation factor of the BMI resin became maximum after 23 minutes and the cure of the BMI resin was completed after 30 minutes.

ACKNOWLEDGEMENTS

This work was supported by the Brain Korea 21 Project and LACOMTECH Co., Ltd.

REFERENCES

1. W. G. McDonough, B. M. Fanconi, F. I. Mopsik and D. L. Hunston, "A Role of Cure Monitoring Techniques for On-line Process Control," Proceedings of the 6th Annual ASM/ESD Advanced Composite Conference, 1990, pp. 637-664.
2. R. E. Wetton, G. M. Foster, V. R. Smith, J. C. Richmond and J. T. Neill, "Dielectric Monitoring of Epoxy Cure-Detailed Analysis," 33rd International SAMPE Symposium, 1988, pp. 1285-1294.
3. W. Sichina, C. L. Marcozzi and P. S. Gill, "Dielectric Analysis of Polymer Materials," 35th International SAMPE Symposium, 1990, pp. 1241-1250.
4. J. S. Kim and D. G. Lee, "On-line Cure Monitoring and Viscosity Measurement of Carbon Fiber Epoxy Composite Materials," J. of Materials Processing Technology, Vol. 37, 1993, pp. 405-416.
5. Robert F. Coughlin and Frederick F. Driscoll, Operational Amplifiers & Linear Integrated Circuits (fourth edition), Prentice Hall, 1991, pp. 201-208.
6. J. S. Kim and D. G. Lee, "Analysis of the dielectric Sensor for Cure Monitoring of Composite materials," J. of Korean Society of Mechanical Engineers, Vol. 19, No. 7, 1995, pp. 1563-1572.
7. AYSYS 5. 5 User's manual, 1988.
8. K. K. Bang, J. K. Choi, H. S. Kim, D. G. Lee and H. S. Jeon, "Development of the Guide Rollers using Electroplated Carbon Fiber -Epoxy Composite for Thin Polymer Film Processing," J. of Composite Structures, Vol. 38, 1997, pp. 321-328.

Table 1 Properties of the copper paste(ACP-060*).

Viscosity (ps at 25•)	400-600
specific gravity (g/cc at 25 •)	3.2
Curing conditions	150• × 30 min.
Hardness(H)	3
Humidity aging(%)	±30
Solder resistance(%)	±30
Shear strength(MPa)	15

* ASAHI CHEMICAL RESEARCH LABORATORY CO.,LTD. , Tokyo, Japan

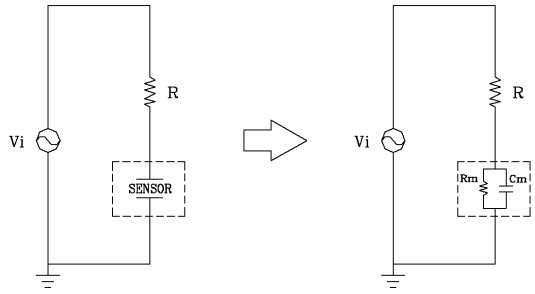

Fig. 1 Electric equivalence of the composite materials in the Direct type circuit.

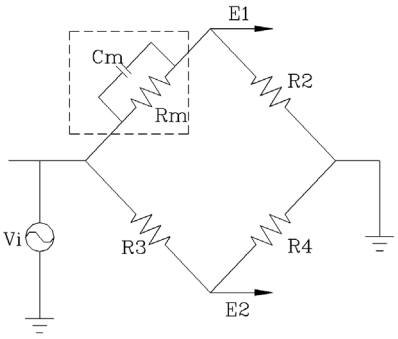

Fig. 2 Electric equivalence of the composite materials in the Wheatstone bridge type circuit.

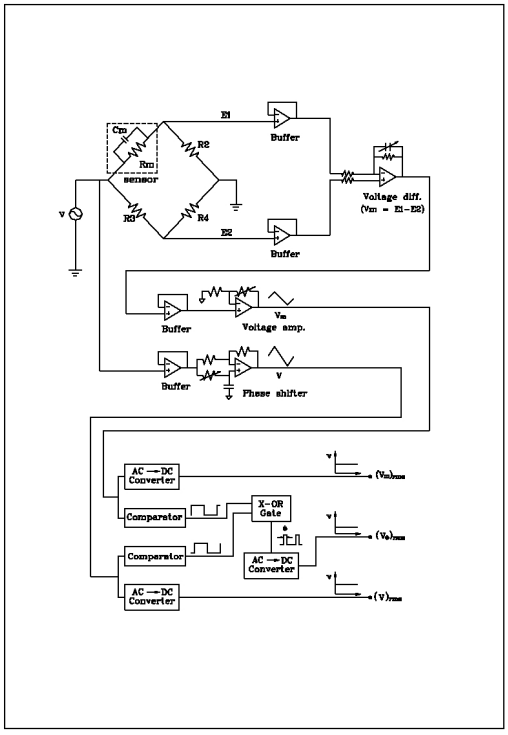

Fig. 3 Schematic diagram of the Wheatstone bridge type circuit.

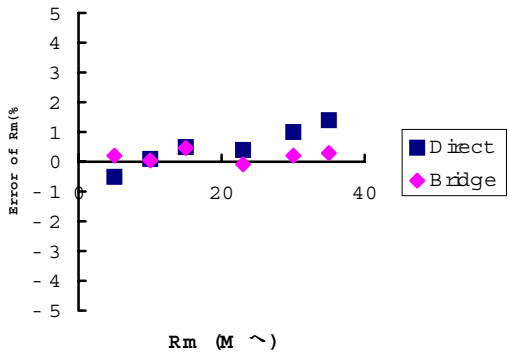

Fig. 4 Errors of the resistance in the Direct type circuit and the Wheatstone bridge type circuit.

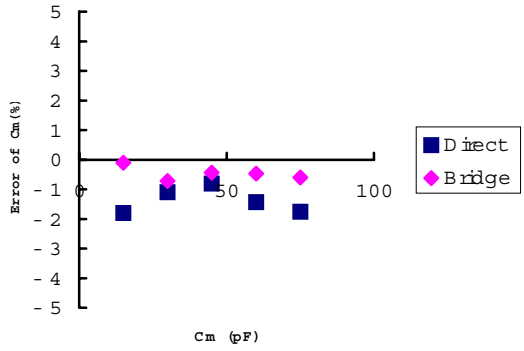

Fig. 5 Errors of capacitance in the Direct type circuit and the Wheatstone bridge type circuit.

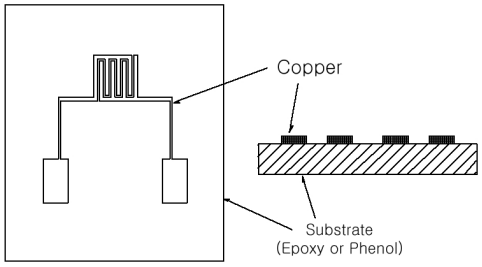

Fig. 6 Structure of polymer based dielectric sensor

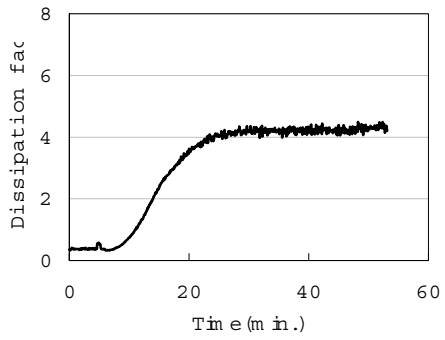

Fig. 7 Variation of the dissipation factor of the conventional dielectric sensor by itself when the holding temperature is 220●.

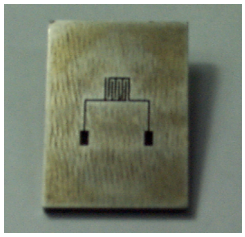

Fig. 8 Photograph of the steel mold for the manufacture of the high temperature dielectric sensor.

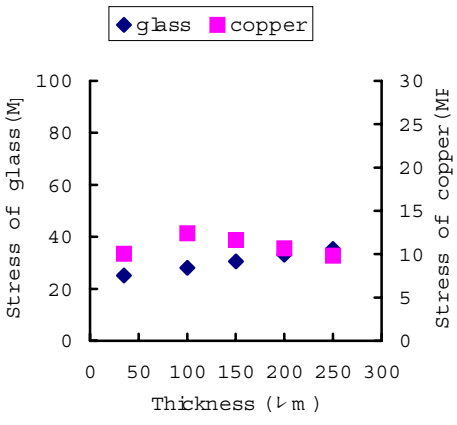

Fig. 9 Residual thermal stresses of the glass substrate and the copper pattern of high temperature dielectric sensor w.r.t height of the sensor pattern.

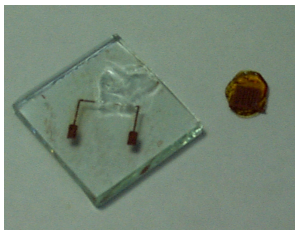

Fig. 10 Photograph of the fractured dielectric sensor by the residual thermal stresses.

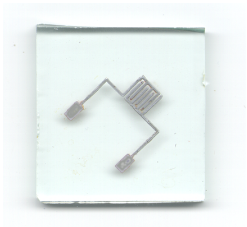

Fig. 11 Photograph of the high temperature dielectric sensor after the electroplating.

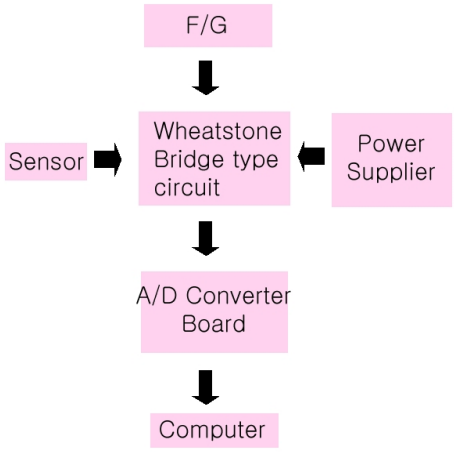

Fig. 12 Schematic diagram of the on-line cure monitoring system for measuring the dissipation factor of the composite material.

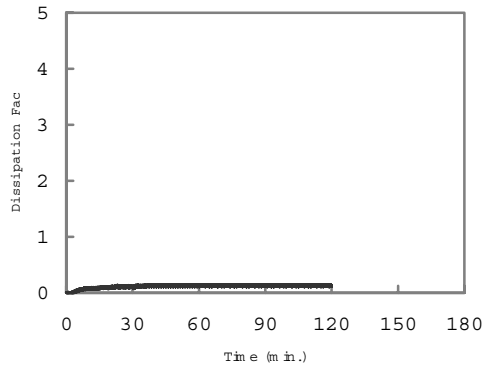

Fig. 13 Variation of the dissipation factor of the high temperature dielectric sensor by itself when the holding temperature is 220●.

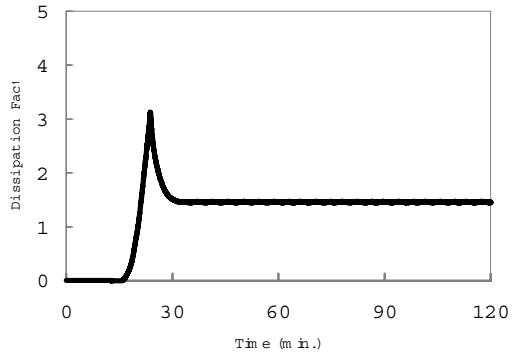

Fig. 14 Measurement of the dissipation factor of the BMI resin using the high temperature dielectric sensor.