ID-1209

COMPOSITE DRIVING END STRUCTURES FOR RAIL ROLLING STOCK

S Ingleton, M S Found and A M Robinson
Advanced Railway Research Centre (ARRC), University of Sheffield, UK

SUMMARY: The use of composites for crashworthy bodyshell applications has been relatively unexplored within the rail industry. The paper presents some of the major technical requirements that composite driving end structures must satisfy in order to be considered for future rolling stock applications. The design and development of such structures are described based on the geometrical shape, and with particular reference to proof loads and collapse requirements.

KEYWORDS: Rake angle, Safety case, Geometrical shape, Structural integrity, Proof loads, Collapse requirements

INTRODUCTION

Although composite structures are used widely in many industries it is only recently that the use of composites for structural applications in the rail industry has gained wider recognition. In the UK rail industry composites have mainly been used for cosmetic appearance and fire protection. Examples of these applications include floors, ceilings, partitions and the aesthetic panelling of vehicle front ends over a load bearing steel structure. However, the use of composites for the main bodyshell, where a high degree of structural integrity is required, has remained relatively unexplored. The design of composite end structures particularly requires that careful consideration be given to the selection of a suitable design in order to optimise the potential of the product.

Legislation introduced in 1994 [1] requires a "Safety Case" to be prepared and a framework for the development of composite structures has been suggested [2]. The introduction of these standards provide engineers with a new set of challenges which need fundamental novel design concepts to be employed in order that end structures satisfy structural integrity requirements and yet collapse in a predictable manner. The use of composite materials in the design of energy absorbing vehicle end structures has received little attention despite the widespread use composites in many related applications.

MARKET ANALYSIS

Examination of the rolling stock markets will provide evidence as to the type of end structures operators require and their key characteristics. The type of vehicles, operating region and the operational requirements of the vehicles have a major influence on the type of end structure needed to facilitate the train operating requirements. The market was analysed for new trains ordered since 1997 by examining the characteristics of the train fronts in terms of rake angle, speed and operational requirements. The dominant factor for the type of ends used in the analysis [3] was the rake angle which were grouped into three categories: marginal rake (gangwayed) of 0 to 10°, medium rake of 10 to 25° and high rake of 25 to 50°. The results of the market analysis are presented in Fig.1 for each category of end structures and show that the medium rake vehicles dominate the market. The use of high rake vehicles is expected to grow as more high speed and tilting vehicles are introduced into the UK.

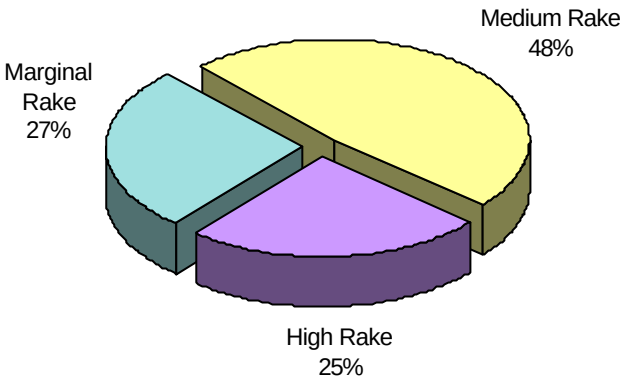

Fig.1 Rolling stock front end types from 1997

The sensitivity of the market to large train orders means that the product type may change. In view of this it was decided to select a design of composite cab with a rake angle of about 25° as a demonstrator to satisfy all the market requirements as shown schematically in Fig.2.

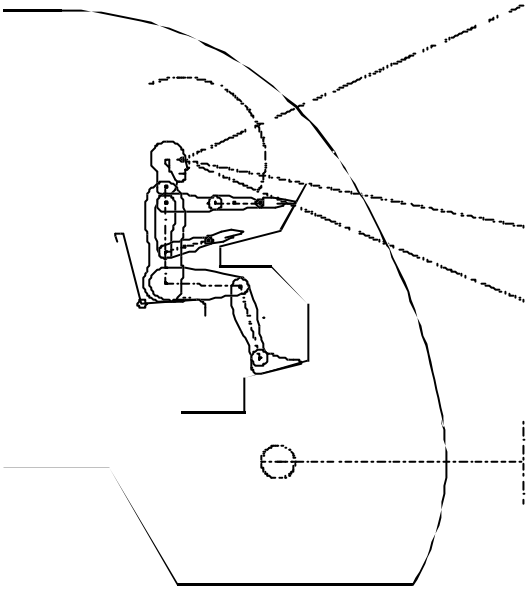

Fig.2 Outline of composite driving end structure for product development

DESIGN

For the design of a composite cab for structural applications within the UK rail industry, Railtrack Group Standards must be satisfied. There are two distinct categories, one which is attributed to structural integrity [4] and the other being the development of the geometrical shape [5].

Geometrical Shape

Whilst the main requirement for the design of driving cabs is to ensure a safe working environment for the driver, the external visibility of the driver constrains its shape. The driver visibility dictates the size of the windscreen and the driver position within the cab structure and directly effects the shape of the end of the train. It is defined by a number of viewing cases within a reference cube of side 400mm located 800mm above the centre of the drivers

seat in its mid position both horizontally and vertically. In addition the drivers position is situated to ensure that the drivers eyes are not less than 500mm from the windscreen (clearance arc). The drivers desk layout is also specified and for high raked cabs require a much larger desk space than for marginally raked front end types due to the three-dimensional styling effects where the cab front and sides meet. This complex compound curvature impacts on the effective space for the drivers desk which is usually maintained by seating the driver further away from the windscreen.

The cab also requires to be shaped to respect adequate clearance between the dynamic behaviour of the train, the infrastructure and passing clearances. The ends of all vehicles which operate in the UK are generally tapered in order to compensate for vehicle-overthrow due to curvature to limit the swept-path of the train. These tapers are extenuated at the driving end by the extended vehicle-overhang required to produce a cab of sufficient size to accommodate a driving position, desk console, equipment cubicles and doors. These and the visual styling requirements produce complex curvature, an effect which is compounded as the rake angle is extenuated. Three-dimensionally formed composite structures are well suited to incorporating the tapered requirements of the cabs. The tapered ends also have a significant effect on the collision capabilities of the end structure as they tend to induce eccentric load paths and complex collapse mechanisms which are difficult to simulate.

In addition, vehicles must be designed to safely negotiate a wide range of specific track conditions where consideration for the interaction between vehicle rakes is paramount. For the driving ends of vehicles the position of the coupler and adjacent anti-climb devices is crucial to ensure that they interact effectively with other rakes. The design of the structure must provide adequate movement for the coupler whilst the anti-climbers must respect clearances between connecting rakes and provide functionality as part of the collision consequence.

Structural Integrity

The structural requirements represent a very high proportion of the total design requirements and compliance with the standard [4] represents the main challenge for the production of composite end structures. The requirements comprise of four main elements; proof loads, collision requirements, driver protection and fatigue loads.

The end structure must withstand a series of proof loads without permanent deformation. The loads are usually simulated using FE techniques and verified by structural testing. The main vehicle end proof loads are shown in Fig.3, which for clarity have been split into two parts.

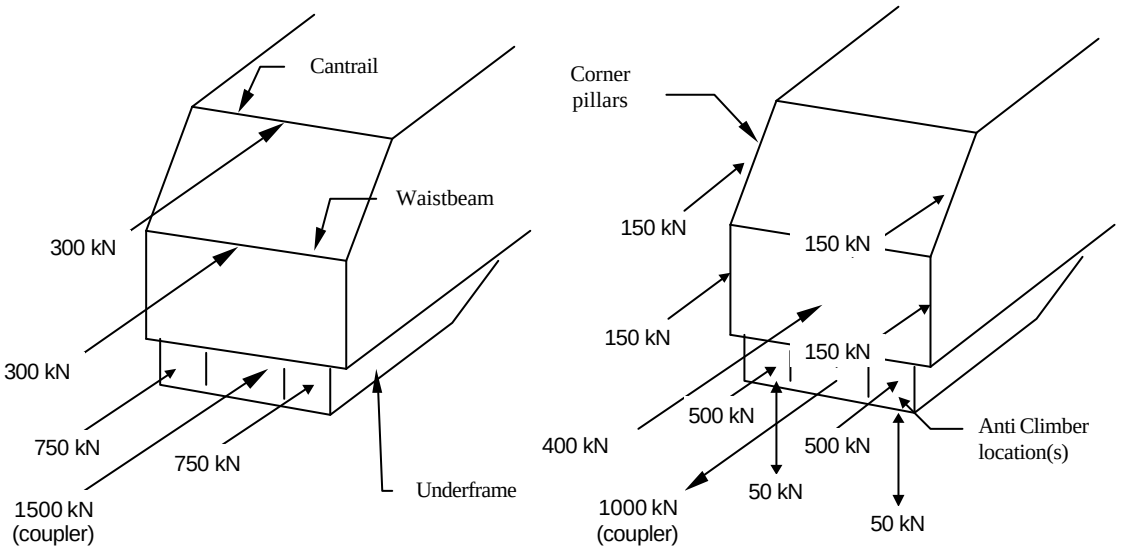

Fig.3 Main end structure proof loads

They comprise of mainly compressive axially applied loads or a combination of compressive and vertical loads applied simultaneously. In order to meet the proof loads the basic structural framework is similar for all end structures where a number of key members are strategically placed. These members provide strength from the underframe of the vehicle up to cantrail level and are designed to resist operational loads such as vehicle coupling and to afford protection to the driver. A key requirement of the proof loads is the ability to facilitate the vertical load case designed to prevent vehicles over-riding each other in a collision, the prevention of which is referred to as anti-climb. This can be provided either through the coupler or via separate anti-climb units adjacent to the coupler, the latter being the more usual method. Such units are designed with ribbed, interlocking teeth and provide an effective and predictable method of preventing vehicle over-ride during collision. These anti-climbers also provide a key load path upon collision which can be used to assist in structural collapse. The vertical end loads provide further examination of the structures, introducing high bending moments and also shear into the side areas in direct contrast to the axially applied end proof loads. A major advantage of composites is that they allow the designer to provide more efficient structures and improve load paths with effective use of fibre reinforcement where required. Whilst the magnitude of all the proof loads are very high the use of composites to withstand high proof loads has been demonstrated by the driving cab of the Stockholm Metro C20 [6].

Accident statistics show that a large majority of injuries and fatalities to train passengers and crew occur in trains from end on collisions, a high proportion of which occurred at impact speeds of less than 75kph [7], and this formed the basis of the collision performance. The risk is increased in end-on collisions which occur as a result of over-riding. This phenomenon is of particular concern where passengers and crew are located near to the vehicle ends. The requirements for collision are intended to prevent vehicles over-riding, limit structural collapse in colliding trains to vehicle ends and to control the manner in which it occurs. Thus, under a collision situation each vehicle end has the ability to absorb energy hence distributing the collapse throughout the train length. Damage is limited to a defined crush zone integrated into the vehicle body structure at the vehicle ends. For slow-speed impacts the couplers are designed to absorb the impact energy, whilst at higher speeds the coupler is designed to break away allowing the anti-climbers to engage, and vehicle ends to progressively collapse and prevent over-riding. The specification of peak forces and the stroke during impacts ensure that on deceleration levels experienced by passengers are limited, thus reducing the severity of injury due to secondary impacts.

The requirements for crashworthiness depend mainly on satisfying the energy absorption conditions and yet not exceeding the specific forces within the maximum stroke available. There are two collapse cases , which are structurally integrated, one being face-to-face and the other over-riding collision as shown schematically in Fig.4. The face-to-face symmetric collision case represents a collision between two similar vehicles where both vehicle ends crumple and absorb the energy. The over-riding collision case is designed to absorb the energy where the structure is subject to structural collapse above floor level ie a collision with a dissimilar vehicle such as a freight wagon. For the former case the location of the anti-climber is an important feature for any collision structure since it has a direct effect on the structural integrity, design approach and collapse performance of the vehicle ends. These principles equally apply to the development of a composite cab.
In theory the collapse force and stroke of the structures would exhibit the idealised characteristics where collapse at constant peak force represents 100% efficiency. However, those for actual structures usually have much lower efficiencies ranging from 60-80% for the full-face collapse and 40-60% for the over-riding case [8]. Since the specific energy absorption capacity of composites out performs that of both steel and aluminium [9] then it should be possible to at least achieve similar efficiencies in the former.

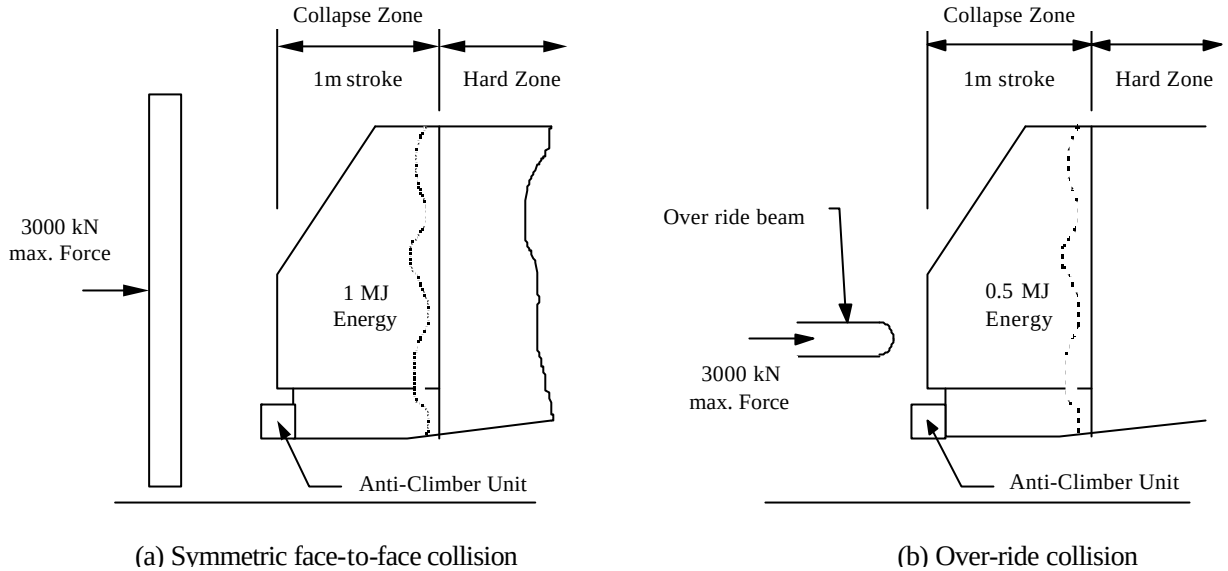

(a) Symmetric face-to-face collision (b) Over-ride collision

Fig.4 Structural collapse requirements

Producing collapse zones at the driving end of the train and large areas of deformation often means that the survival space of the driver is compromised. Drivers could be offered greater protection by adopting survival spaces as part of the design process. Current structures are tested without the drivers environment, some aspects of which may cause serious injury to the driver should he remain seated in an impact. One of the benefits of composites is the effective integration of the structural and interior elements to provide a complete approach to protection of the driver. Additional protection is required from possible missile penetration often due to deliberate acts of vandalism. For forward-facing surfaces the structure must withstand a sharp-cornered 75mm hollow cube of 0.9kg mass travelling at twice the speed of the vehicle. The roof must withstand a 100kg of concrete cube dropped from a height of 3m above the roof with the flat surface impacting.

The end structures of steel and aluminium are rarely troubled with fatigue problems. The use of composites allow local strengthening, streamlined joints and improved load paths in critical areas in order to reduce localised fatigue stresses.

PRODUCT AND PERFORMANCE

The general areas required to be covered include integration and manufacture, aerodynamics and styling, repairability and environment. The ability to integrate a number of systems into a single composite element provides a significant opportunity to reduce cost compared with current practice. For example it is possible to combine the structural strength, aerodynamic, acoustic and thermal requirements into one composite structure, thus eliminating several separate design and manufacturing operations. This principle is illustrated in Fig.5 which compares the cross-section through a cab corner pillar. In addition, the inner and outer laminate skins provide outer cosmetic covering and interior panel. For successful integration of systems the composites will require a self-supporting production process, provide repeatability and produced to tolerances which complement those for interfacing the component to the main bodyshell structure. This will require considerable planning at the conceptual design stage in order to optimise manufacturing processes and minimise costs.

The use of composite structures makes it possible to combine the aerodynamic and styling requirements.

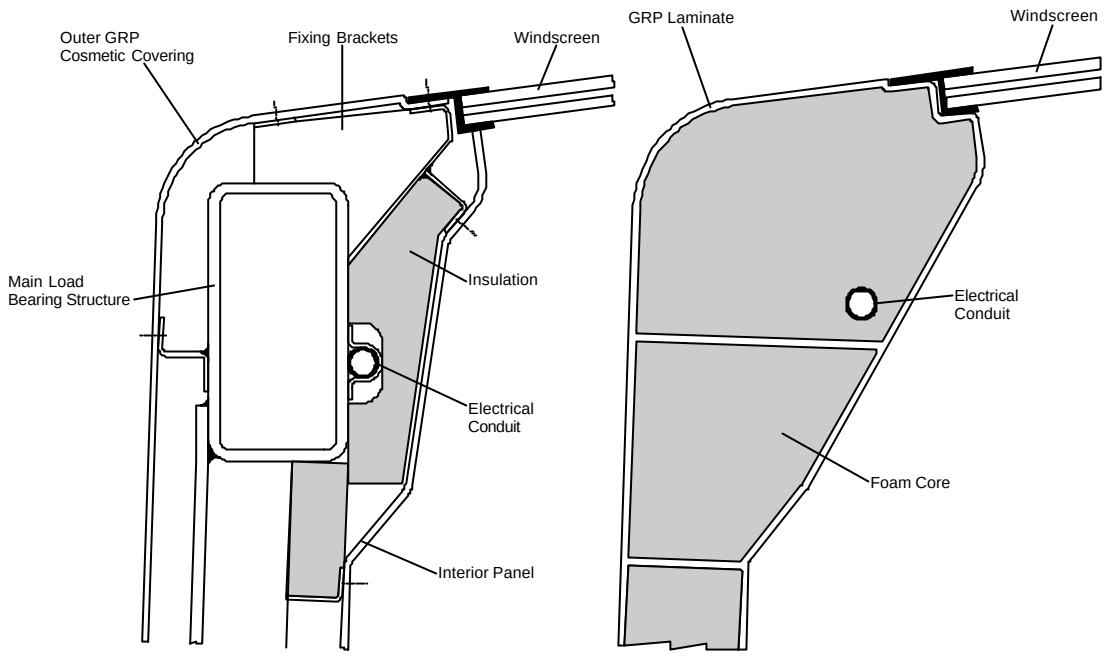

(a) Conventional design (b) Composite design

Fig.5 Section through cab corner pillar

The shape of the cab nose can have a significant effect on aerodynamic performance due to pressure pulses generated by passing trains. These pulses produce cyclic loading on the cab exterior which must be sustained without damage.

The repair of composites in structural applications is of concern when trying to restore the structural integrity of damaged areas. This should also be addressed at the conceptual design stage including the option for replacement of sub-assemblies when more cost effective.

From an environmental aspect a composite cab must be able to operate over a temperature range from –20 to 35°C and meet demanding fire regulations for flame, smoke and toxicity. Furthermore, daily cleaning with chemicals coupled with the use of oils and greases during maintenance have to be resisted by the composite materials. Finally, means of recycling of the cab should also be included at the design stage, to allow for effective disposal at the end of its service.

CONCLUSIONS

There is a significant potential market for the use of structural composite cabs for rolling stock applications. Designing a composite structure to the upper limit of the medium rake front-end angle of about 25° is considered to be the best compromise. In order to realise their potential it is necessary to develop a cab to comply with a range of technical and performance requirements. To meet UK legislation, it is essential that the conceptual stages of product development demonstrate an adequate and viable “Safety Case”. Compliance with Railway Group Standards together with an understanding of the main aspects which influence the geometrical shape of the cab provide the basis for the development of the cab. Once the shape has been fixed the structural integrity can be examined, which is essentially determined by the proof loads and collision requirements. The main challenge for producing structural composite cabs is to satisfy the proof load and for the structure to be capable of collapse in a controlled manner.

REFERENCES

1. Health and Safety Executive, "Railways (Safety Case) Regulations", February 1994.
2. Ingleton, S., Found, M.S. and Robinson, A.M., "Composite Driving End Structures for Rail Applications", *Proceedings of 5th Seminar on Experimental Techniques and Design in Composite Materials*, September 2000, Cagliari, Italy (in press).
3. Robinson, M., Ingleton, S. and Found, M.S., "Wider Applications for Composites", *European Railway Review*, Winter 1999, Vol.5, Issue 4, pp 43-46.
4. Railtrack, Railway Group Standard GM/RT2100, "Structural Requirements for Railway Vehicles", April 1997, Issue 2.
5. Railtrack, Railway Group Standard GM/RT2161, "Requirements for Driving Cabs of Railway Vehicles", August 1995, Issue1.
6. Werne, D.V., "Structural GRP Front for Metro Car", *Conference on Composites in the Rail Industry*, October 1997, Railview Ltd.
7. Lewis,J.H., Rasaiah, W.G. and Scholes, A., "Validation of Measures to Improve Rail Vehicle Crashworthiness", *Proceedings of I.Mech.E.*, 1996, Vol.210, pp 73-85.
8. Railtrack, "Vehicle Bodyshells Meeting Changing Demands", *Proceedings of Railway Technology Event for Systems and Components*, I.Mech.E. Publications, May 1994, Paper C478/1/171 and C478/1/142.