ID-1283

A Study of Electromagnetic Wave Propagation in the Foam Core Sandwich Structures

H. –J. Chun [1] and H. –S. Shin [2]

[1] *School of Electrical and Mechanical Engineering, Yonsei University 134, Shinchon-dong, Seodaemun-gu, Seoul, 120-749, Korea :* hjchun@yonsei.ac.kr

[2] *Department of Mechanical Engineering, Yonsei University 134, Shinchon-dong, Seodaemun-gu, Seoul, 120-749, Korea :* uujajuck@yonsei.ac.kr

SUMMARY: In this study, efforts were made to understand the propagation of electromagnetic wave through the foam core sandwich structure by the analytical model. Foam core sandwich structure model is composed of glass/epoxy composite skins and foam. Transmittance and reflectance of the arbitrary linearly polarized incident TEM waves through unidirectional composites and foam were calculated as functions of fiber orientation of composites and incident angle by the analytical model. From the results of the analysis, the general tendency of transmittance and reflectance of electromagnetic wave through composites and foam was obtained. While transmittance of foam as isotropic material changed slowly, transmittance of composites as anisotropic materials changed dramatically since the attenuation coefficient of composites increased in proportion to incident angle. From the results, it was observed that the propagation of electromagnetic wave through the foam core sandwich structure was mainly affected by the composite skins since the effect of foam on the wave propagation was trivial due to translucent characteristics of foam to electromagnetic field.

From the results of analysis of unidirectional composites as functions of incident and polarization angles and fiber orientation, the relationship between transmittance and polarization angle of the propagation of electromagnetic wave was more complex than that between transmittance and fiber orientation.

From the results of analysis of foam core sandwich structure, it was observed that the maximum transmittances of all cases were more or less similar. However, the gradient of transmittances in the case of [0/30/60]-foam-[60/30/0] and [-60/0/60]-foam-[60/0/-60] were more monotonous than $[0_3]$-foam-$[0_3]$ and [0/90/0]-foam-[0/90/0] since, in the former case, electromagnetic properties became more quasi-isotropic. From the results, it was found the general tendency of the propagation of electromagnetic wave through foam core sandwich structures.

KEYWORD : Anisotropic, Electromagnetic Wave, Transmittance

INTRODUCTION

There are many practical situations where electromagnetic waves interact with composite materials. The knowledge of interaction of electromagnetic waves in composite structures is important for designing the shielding structure for antenna such as radome. Recently, radomes are constructed in the form of foam core sandwich structures that have many mechanical advantages such as high strength, long fatigue life, low density and adaptability to the intended function of structure. However, the propagation of electromagnetic waves is affected by high anisotropic permeability and loss tangent of composite skins. Even though many investigations were focused on the propagation of electromagnetic waves in the composite materials in last several decades, little investigations were carried out to understand adequately the propagation of the electromagnetic waves in the foam core sandwich structures[1-4].

In this paper, numerical analyses of unidirectional composites, foam and foam core sandwich structures as functions of incident and polarization angles and fiber orientation were performed and general tendency of the propagation of electromagnetic wave through foam core sandwich structures was observed.

THEORY

Foam core sandwich structure model is composed of composite skins made up of one or more unidirectional plies stacked together at various orientations and foam. Composite materials have high anisotropic characteristics for mechanical and electromagnetic properties. Incident angle of electromagnetic wave for surface of radome is variable since radome is hemisphere shape. Therefore, incident and polarization angles of TEM wave and fiber orientation of composites are the variables of main concern in this paper. The schematic drawings showing the incident TEM wave entering the foam core sandwich structure and skins made up of several unidirectional plies stacked together at various orientations are shown in Figs. 1 and 2, respectively.

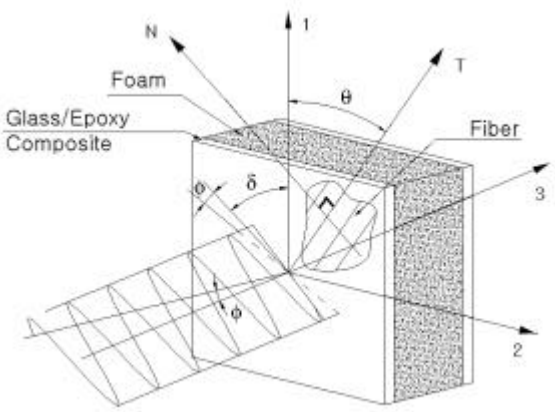

Fig. 1 Schematic drawing showing the incident TEM wave entering the sandwich structure

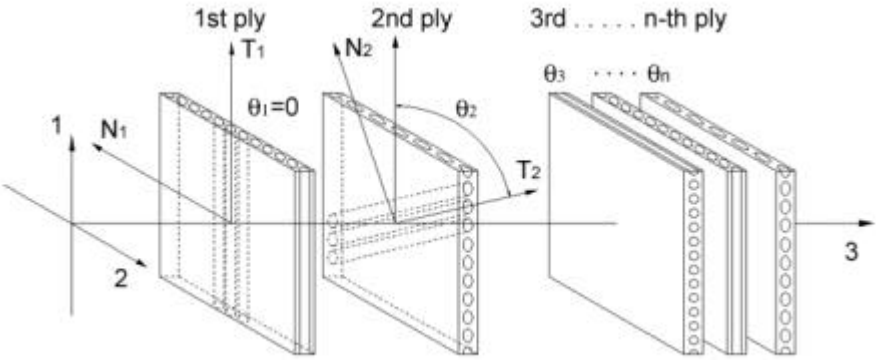

Fig. 2 Schematic drawing showing the skin made up of several unidirectional plies stacked together at various orientations

In these figures, ϕ, δ, θ, N and T are the incident and polarization angles of TEM wave, fiber orientation, normal and tangential direction of fiber in the composite skins, respectively.

The wave equation of electric field through anisotropic nonmagnetic media($m \approx m_0$) can be expressed as follows:

$$\begin{aligned}\vec{E} &= \vec{E}_0 e^{-[a]\vec{u}\cdot\vec{r}} e^{j(wt-[b]\vec{u}\cdot\vec{r})} \\ &= \cos d \cos f\, E_0 e^{-[a]\vec{u}\cdot\vec{r}} e^{j(wt-[b]\vec{u}\cdot\vec{r})}\vec{i} + \sin d \cos f\, E_0 e^{-[a]\vec{u}\cdot\vec{r}} e^{j(wt-[b]\vec{u}\cdot\vec{r})}\vec{j} \\ &\quad + \sin f\, E_0 e^{-[a]\vec{u}\cdot\vec{r}} e^{j(wt-[b]\vec{u}\cdot\vec{r})}\vec{k}\end{aligned} \tag{1}$$

where, $[a] = [T]^{-1}[a_0][T]$, $[b] = [T]^{-1}[b_0][T]$, $\vec{u}$: propagation vector, $\vec{r}$: position vector,

$$[T] = \begin{bmatrix} \cos q & \sin q & 0 \\ -\sin q & \cos q & 0 \\ 0 & 0 & 1 \end{bmatrix} \text{ : rotating tensor,}$$

$$a_{0ij} = \frac{wmg_{0ij}}{2b_{0ij}}, \quad b_{0ij} = \sqrt{\frac{wm\left(we_{0ij} + \sqrt{w^2 e_{0ij}^2 + g_{0ij}^2}\right)}{2}} \qquad (i, j = 1, 2, 3)$$

and m is permeability. $[g_0]$ and $[e_0]$ are conductivity and permittivity tensor along the principal ply directions, respectively.

In the case of a linearly polarization TEM wave traveling perpendicular to the 2-axis, phase velocity(V) can be expressed as follows :

$$\begin{aligned} V_1 &= \frac{w \sin f}{b_{11}\sin^2 f + b_{33}\cos^2 f} \\ V_2 &= 0 \\ V_3 &= \frac{w \cos f}{b_{11}\sin^2 f + b_{33}\cos^2 f} \end{aligned} \tag{2}$$

For the interface between the m and m+1 ply, Snell's law can be expressed as follows :

$$\frac{|V_m|}{\sin f_m} = \frac{|V_{m+1}|}{\sin f_{m+1}} \tag{3}$$

Based on Snell's law, an angle of refraction is determined as follows[5] :

$$f_{m+1} = \sin^{-1}\left(\sqrt[3]{\frac{n+\sqrt{n^2+4m^3/27}}{2}} - \sqrt[3]{\frac{-n+\sqrt{n^2+4m^3/27}}{2}} \right) \tag{4}$$

where, $m = \dfrac{(\boldsymbol{b}_{33})_{m+1}}{(\boldsymbol{b}_{11})_{m+1} - (\boldsymbol{b}_{33})_{m+1}}$ and $n = \dfrac{\sin f_m \{(b_{11})_m \sin^2 f_m - (b_{33})_m \cos^2 f_m\}}{(b_{11})_{m+1} - (b_{33})_{m+1}}$

It is assumed that a linearly polarized TEM wave of known amplitude E_0 and known frequency f impinges on foam core sandwich structure. The schematic drawing showing the electric field vectors (E_0) entering the foam core sandwich structure is shown in Fig. 3.

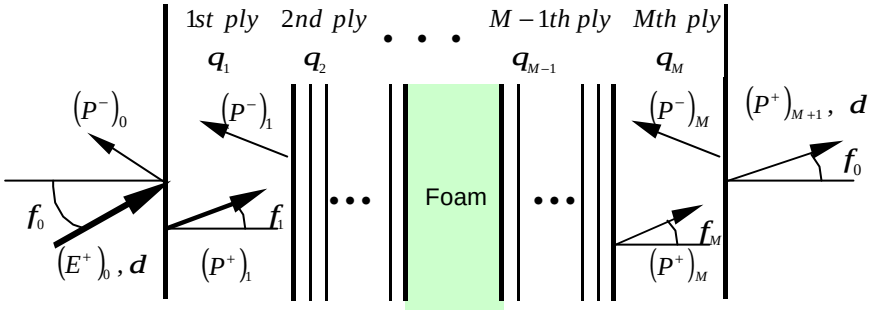

Fig. 3 Schematic drawing showing electric field vectors at foam core sandwich structure

At the interface, a portion transmitted of the arriving wave through the interface is denoted by $(E)_t$, and a portion reflected of it is denoted by $(E)_r$. The reflected portion of the right traveling wave is denoted by $(E^+)_r$, and the reflected portion of the left traveling wave is denoted by $(E^-)_r$ [7].

At the interface, the electromagnetic waves entering and leaving must be equal. This condition requires that the following equalities be satisfied at the interface.

$$E^+ = (E^+)_t + (E^+)_r$$

$$E^- = (E^-)_t + (E^-)_r \tag{5}$$

Two electric field vectors are defined as follows :

$$P^+ \equiv (E^+)_t + (E^-)_r$$

$$P^- \equiv (E^-)_t + (E^+)_r \tag{6}$$

For the interface between the m+1 and m ply, the refraction coefficient tensor(r_{ij}) can be expressed as follows :

$$r_{ij} = \left| \frac{\left(N_{ij}\right)_{m-1} - \left(N_{ij}\right)_m}{\left(N_{ij}\right)_{m-1} + \left(N_{ij}\right)_m} \right| \tag{7}$$

where, $[N] = [T]^{-1}[N_0][T]$ and $N_{0ij} = \sqrt{m / \boldsymbol{e}_{0ij}}$

The reflected and incident electric field vectors are related by the expressions

$$\left(E^+\right)_r = [r]\left(E^+\right)$$

$$\left(E^-\right)_r = [r]\left(E^-\right) \tag{8}$$

The electric field traveling through the material is attenuated. Thus, attenuation coefficient of the electric field can be expressed as follows[6]:

$$\vec{E} = \vec{E}_0 e^{-[a]\vec{u}\cdot\vec{r}} e^{j(wt-[b]\vec{u}\cdot\vec{r})} = \vec{E}_0 A e^{j(wt-[b]\vec{u}\cdot\vec{r})} \tag{9}$$

where, $A = e^{-[a]\vec{u}\cdot\vec{r}}$: attenuation coefficient

The schematic drawing showing electric field vectors at the m-th ply is shown in Fig. 4.

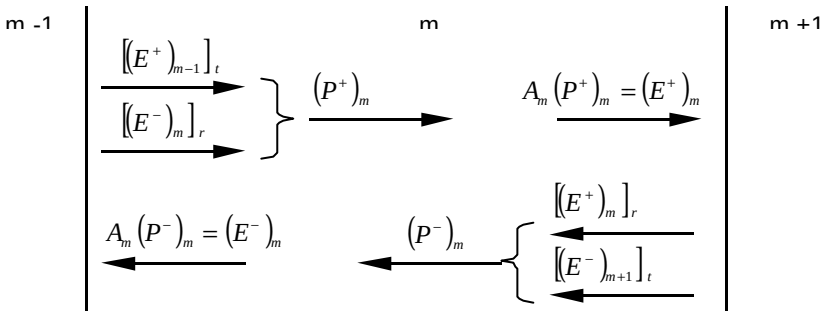

Fig.4 Schematic drawing showing electric field vectors at the m-th ply

The electric field vectors in the m-th ply can be expressed as follows :

$$\begin{aligned}
\left(P^+\right)_m &= \left[\left(E^+\right)_{m-1}\right]_t + \left[\left(E^-\right)_m\right]_r \\
&= \left(E^+\right)_{m-1} - \left[\left(E^+\right)_{m-1}\right]_r + \left[\left(E^+\right)_m\right]_r \\
&= \left(E^+\right)_{m-1} - [r]_{(m-1)(m)}\left(E^+\right)_{m-1} + [r]_{(m-1)(m)}\left(E^+\right)_m \\
&= \left([I] - [r]_{(m-1)(m)}\right)[A]_{m-1}\left(P^+\right)_{m-1} + [r]_{(m-1)(m)}[A]_m\left(P^-\right)_m
\end{aligned}$$

$$\begin{aligned}
\left(P^-\right)_m &= \left[\left(E^+\right)_{m+1}\right]_t + \left[\left(E^+\right)_m\right]_r \\
&= \left(E^-\right)_{m+1} - \left[\left(E^-\right)_{m+1}\right]_r + \left[\left(E^+\right)_m\right]_r \\
&= \left(E^-\right)_{m+1} - [r]_{(m)(m+1)}\left(E^-\right)_{m+1} + [r]_{(m)(m+1)}\left(E^-\right)_m \\
&= \left([I] - [r]_{(m)(m+1)}\right)[A]_{m+1}\left(P^+\right)_{m+1} + [r]_{(m)(m+1)}[A]_m\left(P^-\right)_m
\end{aligned} \tag{10}$$

where, $[I]$: identity matrix and $[A]$: attenuation tensor

For a given incident TEM wave, incident, reflected and transmitted energy flux are obtained as follows [8]:

$$F_i = \frac{\left|\left(E^+\right)_0\right|^2}{2Z_0}, \quad F_r = \frac{\left|\left(P^-\right)_0\right|^2}{2Z_0}, \quad F_t = \frac{\left|\left(P^+\right)_{M+1}\right|^2}{2Z_0} \tag{11}$$

where, Z_0 : impedence in free space ($\approx 120p$)

Solving Eq. 10, $\left(P^-\right)_0$ and $\left(P^+\right)_{M+1}$ can be obtained. Using Eq. 11, transmittance and reflectance of the incident linearly polarized TEM waves can be calculated as functions of fiber orientation of composites, incident and polarization angles.

RESULTS AND DISCUSSION

Glass/epoxy composites and foam are the materials of main concern in this study, because they are widely used in radome. These materials are nonmagnetic($m \approx m_0$). Input constants used in this analysis are shown in Table 1.

Table 1 Input constants for analysis

	Foam	Glass/Epoxy Composites		
Relative Permeability	1.3	Longitudinal Direction	Transverse In-Plane Direction	Transverse Out-of-Plane Direction
		4.6	3.4	3.3
Conductivity[$\Omega^{-1}m^{-1}$]	2.1×10^{-4}	3.3×10^{-2}	2.3×10^{-2}	2.2×10^{-2}
Thickness [mm]	7	0.3		
Frequency [GHz]	10			

In the case of relative permeability and conductivity, typical values were determined within general range of material constants of foam and glass/epoxy composites. Using above constants, numerical analysis of unidirectional composites and foam was performed to obtain the general tendencies of transmittance and reflectance of electromagnetic wave through composites and foam. The plots of transmittance and reflectance of TEM wave through glass/epoxy composites and foam as a function of incident angle are shown in Fig. 5.

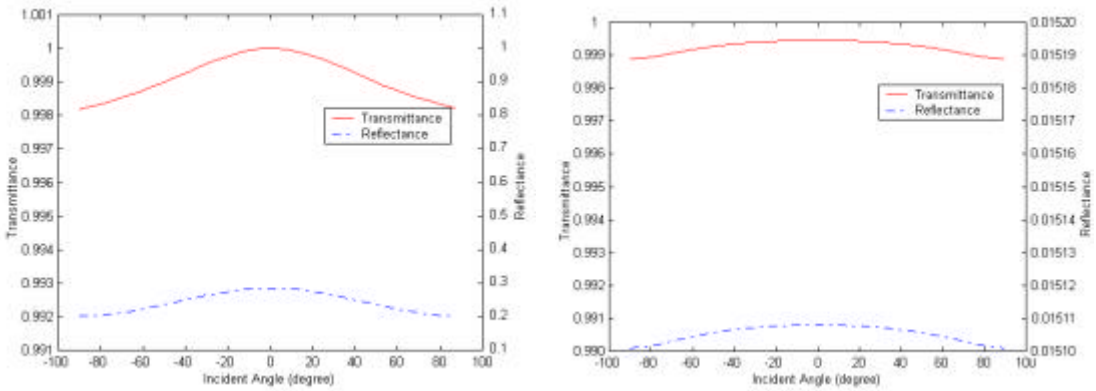

(a) (b)

Fig. 5 Transmittance and reflectance of TEM wave through (a) glass/epoxy composites and (b) foam as a function of incident angle (polarization angle θ = 0)

Though reflectance decreased in proportion to incident angle, transmittance decreased because of the attenuation of both composites and foam as shown in Fig. 5. While transmittance of foam as isotropic materials changed slowly, transmittance of composites as anisotropic materials changed dramatically since attenuation coefficient of composites increased in proportion to incident angle. It was observed that the propagation of electromagnetic wave through the foam core sandwich structure was mainly affected by the composite skins since the effect of foam on the wave propagation was trivial due to translucent characteristics of foam to electromagnetic field.

Numerical analysis of unidirectional composites as functions of incident and polarization angles and fiber orientation was performed to obtain the relationship among transmittance, polarization angle and fiber orientation. The plots of transmittance of TEM wave through glass/epoxy composites as functions of polarization and incident angles are shown in Fig. 6.

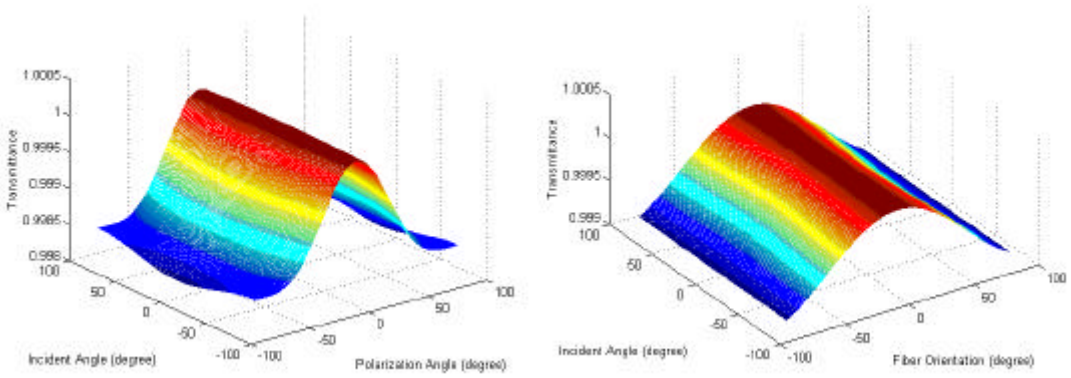

(a) (b)

Fig. 6 Transmittance of glass/epoxy composites as functions of (a) polarization and incident angles and (b) fiber orientation and incident angle

The relationship between transmittance and polarization angles of the propagation of electromagnetic wave was more complex than that between transmittance and fiber orientation as shown in Fig. 6. In the case of foam core sandwich structure, numerical analysis as functions of incident and polarization angles was performed for various stacking sequences. The plots of transmittance of TEM wave in foam core sandwich structures with various stacking sequences of composite skins as functions of polarization and incident angles are shown in Fig. 7.

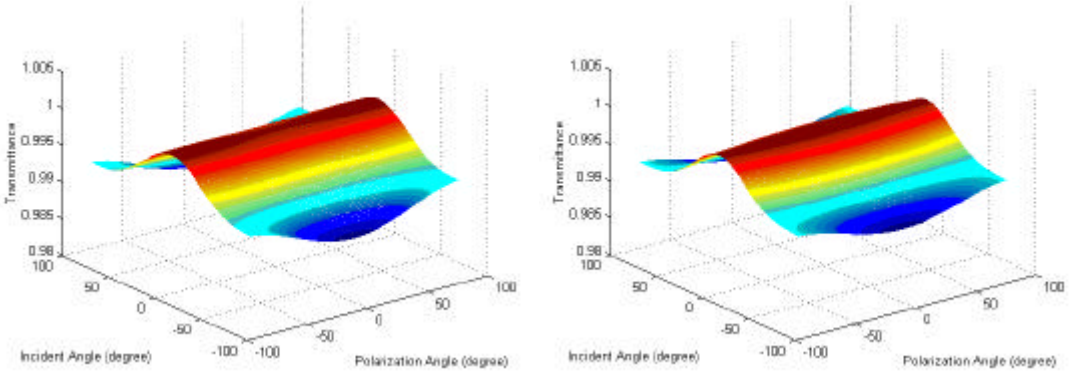

(a) (b)

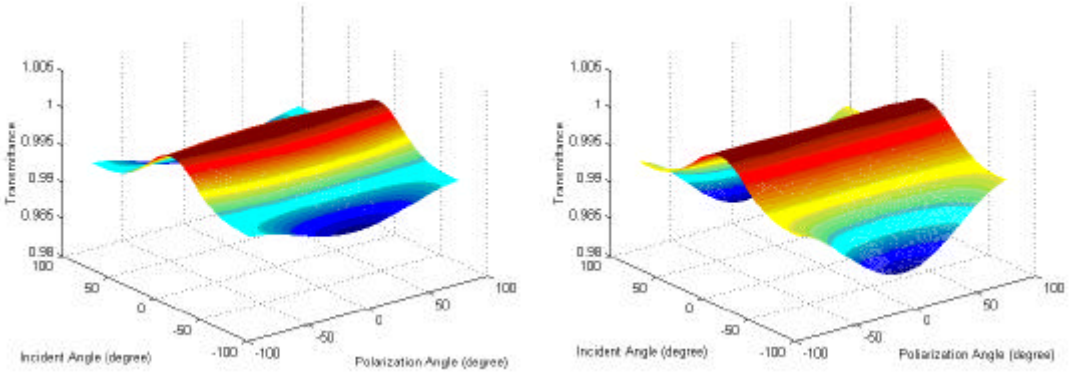

(c) (d)

Fig. 7 Transmittance of TEM wave in foam core sandwich structure (a) [0_3]-foam-[0_3] (b) [0/30/60]-foam-[60/30/0] (c) [-60/0/60]-foam-[60/0/-60] (d) [0/90/0]-foam-[0/90/0] as functions of polarization and incident angles

It was observed that maximum transmittances of all cases were more or less similar. However, the gradient of transmittance in the case of Fig. 7 (b) and (c) was more monotonous than that in the case of Fig. 7 (a) and (d) since, in the former case, property became more quasi-isotropic.

From Fig. 7, general tendency of the propagation of electromagnetic wave through foam core sandwich structures with various stacking sequences of composite skins can be obtained. To design spherical foam core sandwich structure radome, transmittance of electromagnetic wave is important. The tendency of electromagnetic wave propagation necessary for optimizing radome made of foam core sandwich structure with anisotropic composite skins can be obtained from numerical model proposed in this paper.

CONCLUSIONS

Recently, radomes are constructed in the form of foam core sandwich structures that have

many mechanical advantages such as high strength, long fatigue life, low density and adaptability to the intended function of structure. However, the propagation of electromagnetic waves is affected by high anisotropic permeability and loss tangent of composite skins. Numerical analyses of unidirectional composites, foam and foam core sandwich structure as functions of incident and polarization angles and incident angle and fiber orientation were performed. From the results of numerical analysis, it was observed that the propagation of electromagnetic wave through the foam core sandwich structure was mainly affected by the composite skins since the effect of foam on the wave propagation was trivial due to translucent characteristics of foam to electromagnetic field.

From the results, the general tendency of the propagation of electromagnetic wave through foam core sandwich structures was observed. In this paper, the analytical model and method to predict the propagation of electromagnetic waves through the foam core sandwich structures were proposed.

ACKNOWLEDGEMENTS

The authors are grateful for the support provided by Brain Korea 21 from Korea Research Foundation (KRF).

REFERENCES

1. Krohn, T.L. and Medgyesi-Mitschang, L.N., "Scattering from composite materials: a first-order model" *Antennas and Propagation, IEEE Transactions on,* 1989, Vol. 37, Issue : 2, pp. 219-228

2. O. Poncelet and M. Deschamps, "Reflection and Refraction of an Inhomogeneous Plane Wave on Fluid/Anisotropic Solid Interface", *ULTRASONICS SYMPOSIUM, 1994. Proceeding., 1994 IEEE,* Vol. 2, pp. 753-756

3. Sobrinho, C.L.d.S.S. and Giarola, A.J., "Analysis of rectangular anisotropic dielectric waveguide structures", *Antennas and Propagation Society International Symposium, 1991.* AP-S. Digest, 1991, Vol. 1, pp. 500-503

4. Torres Lima, I., Jr. and Giarola, A.J., "Electromagnetic wave propagation in two dimensional anisotropic dielectric gratings", *Antennas and Propagation Society International Symposium, 1997*, IEEE., 1997, Digest, Vol. 4, pp. 2400-2403

5. von Hippel, A. R., "Dielectrics and Waves. New ed", *Artech House,* 1995

6. Cornbleet, S., "Microwave Optics", *Academic Press*, 1976

7. Lee, W. I. and George S. Springer, "Interaction of Electromagnetic Radiation with Organic Matrix Composites", *Journal of Composite Materials*, 1984, Vol. 18, pp. 357-386

8. William H. Hayt, Jr., "Engineering Electromagnetics", *McGraw-Hill*, 1989