ID-1652

EXACT SOLUTION FOR COMPOSITE CYLINDERICAL PIPES UNDER TRANSVERSE LOADING

Kiyoshi Kemmochi, Ming Xia and Hiroshi Takayanagi

National Institute of Materials and Chemical Research (NIMC),
National Institute of Advanced Industrial Science and Technology (AIST),
Ministry of Economy, Trade and Industry (METI),
1-1, Higashi, Tsukuba, Ibaraki, 305-8685, Japan

SUMMARY: Based on the curved composite-beam and multilayer-buildup theories, exact solutions are presented for stress and deformation analyses of laminated composite cylindrical pipes subjected to transverse loading. The analytical procedure is applied to an example of a composite sandwich pipe with an isotropic core layer and fiber-reinforced skin layers. Stress distributions within the pipe are investigated. Simple analytical methods can be used to evaluate the stresses and strains of multiple-layer cylindrical structures under transverse loading conditions.

KEYWORDS: Composite materials, Composite structure, Cylindrical pipe, Transverse loading, Stress analysis

INTRODUCTION

Sandwich structures possess several properties that make them attractive for use in components and structures. They can be manufactured to a highly specific stiffness and strength, and their mechanical properties can be tailored to specific needs. Considerable attention has been devoted to studies of the general shell theory [1-3]. However, relatively little work has been done on the formulation of the basic equation for multi-ply cylindrical composite structures. Alderson and Evans [4] used video cameras and strain gauges to examine the failure of filament-wound pipes under transverse loading and low-velocity impact conditions. They indicated that the yield in the resin matrix causes delamination initiation at low load, then, a process that continues with the slow growth of one favorable delamination. Nishiwaki *et al.* [5] reported a lateral compressive analysis of a composite cylinder. Based on a quasi-three-dimensional model and the finite element method (FEM), the fracture behaviors of CFRP cylinders subjected to lateral compressive loading were simulated and compared to the experimental results.

In this paper, we report on the stress and strain analyses of laminated composite cylindrical pipes under lateral loading. The schematic diagram of a sandwich pipe subjected to lateral loading is shown in Figure 1. Two analytical methods based on curved composite-beam and multilayer-buildup theories are presented. In the case of laminated cylindrical pipes with a comparatively high Young's modulus, the curved composite-beam theory can be applied because shear deformation must not be added to the deflection due to the bending moment. The

multilayer-buildup theory, which has been applied to the analysis of laminated structures, is characterized by a consideration of the relative displacement between interfaces.

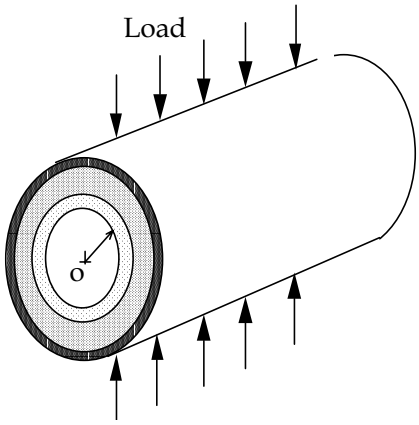

Fig. 1 Laminated composite cylindrical pipe subjected to transverse loading

CURVED COMPOSITE-BEAM THEORY

For a curved composite beam, the strain, the stress, the axial force, and the moment acting on the beam can be respectively expressed as follows:

$$\varepsilon_i = \varepsilon_0 + (\omega - \varepsilon_0)\frac{y}{R+y}, \tag{1a}$$

$$\sigma_i = E_i\left\{\varepsilon_0 + (\omega - \varepsilon_0)\frac{y}{R+y}\right\} \qquad (i = 1, 2, \Lambda\ , n), \tag{1b}$$

$$N = \sum_{i=1}^{n}\int_{A_i}\sigma_i d_{A_i} = \sum_{i=1}^{n}\int_{A_i}E_i\left\{\varepsilon_0 + (\omega - \varepsilon_0)\frac{y}{R+y}\right\}d_{A_i}\ , \tag{1c}$$

$$M = \sum_{i=1}^{n}\int_{A_i}\sigma_i\, y\, d_{A_i} = \sum_{i=1}^{n}\int_{A_i}E_i\left\{\varepsilon_0 + (\omega - \varepsilon_0)\frac{y}{R+y}\right\}y\, d_{A_i}\ . \tag{1d}$$

where R is the radius of the curvature of the midplane, and ε_0 and ω are the strain of the midplane and the variation of angle of rotation at the cross section, respectively.

If $\int_{A_i} y d_{A_i} = I_i$ and $\int_{A_i}\frac{y}{R+y}d_{A_i} = -k_i A_i$, we obtain

$$\int_{A_i}\frac{y^2}{R+y}d_{A_i} = I_i + Rk_i A_i\ . \tag{2}$$

Substituting these expressions for Eqns. (3), the axial force *(N)* and the moment *(M)* can be

given by the following:

$$N = \varepsilon_0 \sum_{i=1}^{n} E_i A_i - (\omega - \varepsilon_0) \sum_{i=1}^{n} k_i E_i A_i \tag{3a}$$

$$M = \varepsilon_0 \sum_{i=1}^{n} E_i I_i + (\omega - \varepsilon_0) \sum_{i=1}^{n} (E_i I_i + R k_i E_i A_i) \,. \tag{3b}$$

ε_0 and ω can be obtained from Eq. (3), written as the following respective equations:

$$\varepsilon_0 = \frac{N \sum_{i=1}^{n} (E_i I_i + R k_i E_i A_i) + M \sum_{i=1}^{n} k_i E_i A_i}{\left(\sum_{i=1}^{n} E_i A_i\right)\left(\sum_{i=1}^{n} (E_i I_i + R k_i E_i A_i)\right) + \left(\sum_{i=1}^{n} E_i I_i\right)\left(\sum_{i=1}^{n} k_i E_i A_i\right)}, \tag{4a}$$

$$\omega = \frac{N R \sum_{i=1}^{n} k_i E_i A_i + M \sum_{i=1}^{n} (k_i E_i A_i + E_i A_i)}{\left(\sum_{i=1}^{n} E_i A_i\right)\left(\sum_{i=1}^{n} (E_i I_i + R k_i E_i A_i)\right) + \left(\sum_{i=1}^{n} E_i I_i\right)\left(\sum_{i=1}^{n} k_i E_i A_i\right)}. \tag{4b}$$

where k_i and I_i are defined as the section modulus of a curved beam and the first moment of area, respectively.

The solutions for strain and stress of pipes under transverse loading can be found by substituting Eq. (4) into Eqs. (1a) and (1b), respectively.

MULTILAYER-BUILDUP THEORY

According to linear theory, a superposition technique can be used to simplify a solution procedure multilayer-buildup analysis. A multi-ply pipe due to lateral loading is classified into two basic problems which have the same solution. The analysis of forces on a quarter pipe subjected to the lateral loading P is shown in Figure 2. P_i and T_i are the axial and the shear forces at $\phi = 0$, respectively. M_{0i}^{P} and M_{0i}^{T} are the moments at $\phi = 0$, which are caused by the forces P_i and T_i, respectively.

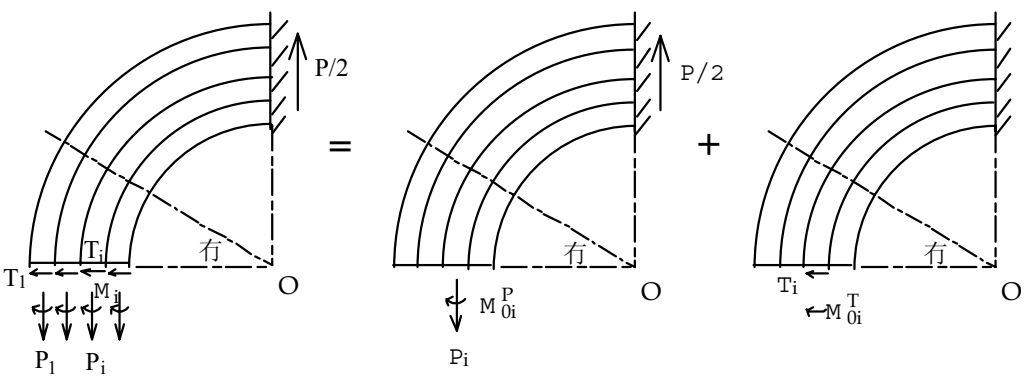

Fig. 2 Analysis of forces acting on multi-ply pipe

The radial deflections at $\phi = 0$ and $\pi/2$ due to P_i can be respectively given by

$$u\Big|_{\phi=0}^{P} = -\frac{P_i R_{0i}}{k_i E_i A_i}\left\{\frac{1}{2} - \frac{2}{\pi} + \frac{2k_i}{\pi(1+k_i)}\right\} \tag{5a}$$

$$u\Big|_{\phi=\pi/2}^{P} = \frac{P_i R_{0i}}{k_i E_i A_i}\left\{\frac{\pi}{4} - \frac{2}{\pi} + \frac{2k_i}{\pi(1+k_i)}\right\}. \tag{5b}$$

The radial deflections caused by T_i at $\phi = 0$ and $\pi/2$ are, respectively,

$$u\Big|_{\phi=0}^{T} = \frac{T_i R_{0i}}{k_i E_i A_i}\left\{\frac{\pi}{4} - \frac{2}{\pi} + \frac{2k_i}{\pi(1+k_i)}\right\} \tag{5c}$$

$$u\Big|_{\phi=\pi/2}^{T} = -\frac{T_i R_{0i}}{k_i E_i A_i}\left\{\frac{1}{2} - \frac{2}{\pi} + \frac{2k_i}{\pi(1+k_i)}\right\} \tag{5d}$$

where R_{0i} is the radius of the midplane at the *ith* layer pipe. k_i is the section modulus of the laminated pipes, as given in the Appendix.
Considering the continuity of the radial deflections along the interface of the pipe, if

$$\eta_i = \frac{R_{0i}}{k_i E_i A_i}\left\{\frac{1}{2} - \frac{2}{\pi} + \frac{2k_i}{\pi(1+k_i)}\right\}, \tag{6a}$$

$$\zeta_i = \frac{R_{0i}}{k_i E_i A_i}\left\{\frac{\pi}{4} - \frac{2}{\pi} + \frac{2k_i}{\pi(1+k_i)}\right\}. \tag{6b}$$

According to the continuity conditions for the displacements in the interfaces, we have

$$u\Big|_{\phi=0}^{P} + u\Big|_{\phi=0}^{T} = const. \tag{7a}$$

$$u\Big|_{\phi=\pi/2}^{P} + u\Big|_{\phi=\pi/2}^{T} = const. \tag{7b}$$

Substituting Eq. (6) into Eq. (5) and using Eq. (7), we get

$$-P_i\eta_i + T_i\zeta_i = -P_{i+1}\eta_{i+1} + T_{i+1}\zeta_{i+1} \tag{8a}$$

$$P_i\zeta_i - T_i\eta_i = P_{i+1}\zeta_{i+1} - T_{i+1}\eta_{i+1} \qquad (i = 1, 2, \Lambda\ , n-1). \tag{8b}$$

The force equilibrium leads to

$$\sum_{i=1}^{n} P_i = P/2 \tag{9a}$$

$$\sum_{i=1}^{n} T_i = 0. \tag{9b}$$

Equations (8) and (9) give a set of equations used to determine the unknown forces P_i and T_i . They can be obtained from the solution of the simultaneous equation (Eqs 8 and 9).

The stress (σ_i) is given by the following:

$$\sigma_i = \frac{1}{A_i}\left\{N_i + \frac{M_i}{R_{0i}} + \frac{M_i}{k_i R_{0i}} \frac{y_i}{R_{0i} + y_i}\right\} \tag{11}$$

where y_i is the distance from the midplane on each layer. N_i and M_i are the axial force and the moment, respectively.

RESULTS AND DISCUSSION

This analytical procedure is applied to a filament-wound sandwich composite pipe. The sandwich pipe is created using fiber-reinforced materials with an alternate ply $(\pm 54.5^0)$ for the skin layers and a resin material for the core layer. The pipe has an inner radius of 50 mm, a core-layer thickness of 20 mm, a width of 50 mm, and a skin-layer thickness of 2 mm. In the present analysis, the sandwich pipe is subjected to lateral loading of 1 kN/m. The material constants of the resin and the fiber-reinforced material with unidirectional lamination are listed in Table 1.

Table 1 Material properties

Materials	E_L (GPa)	E_T (GPa)	G_{LT} (GPa)	ν_{LT} —
UD	39.4	8.26	5.47	0.309
Foam	0.0078	0.0078	0.003	0.3

Figure 3 shows the stress distributions through the wall of the sandwich pipe at sections C and A based on the analysis of the composite-beam theory. The stress for the core layer is almost equal to zero because the core layer has a modulus that is quite low. Figure 4 shows the stress distributions based on the analysis of the multilayer-buildup theory. Compared to the composite-beam theory, both the inner and outer pipes are subjected to a variation from tensile to compressive stresses because of slippage among the interfaces. There are two neutral planes, the positions of which are within the inner and outer pipes. For an analysis of the composite-beam theory, however, there is only one neutral plane.

The experimental and the calculated results showing the strain compliance are listed in Table 2. The pipe deflections in the horizontal and vertical directions and the strain in section C were measured. The values obtained from the experimental results fall between the calculations based on the composite-beam and multilayer-buildup theories. This is because the

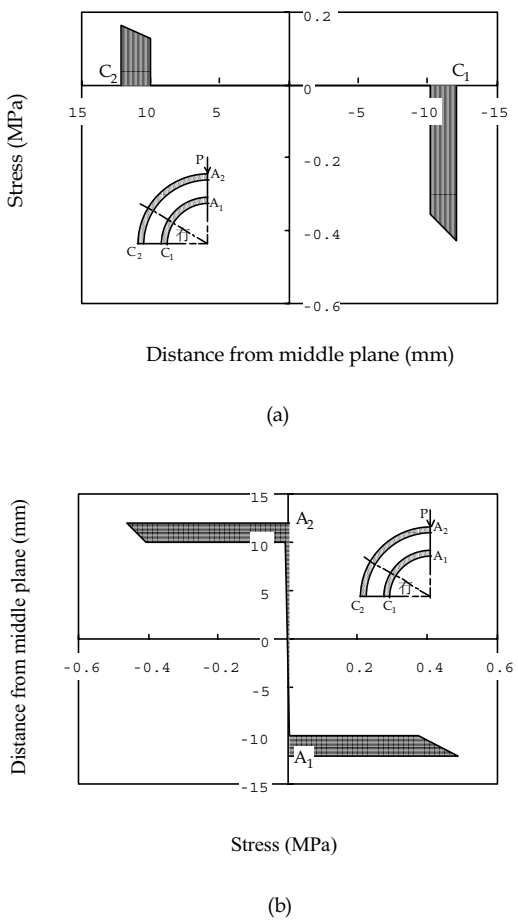

Fig. 3 Stress distribution within a sandwich pipe with (a) section C and (b) section A based on the composite-beam theory

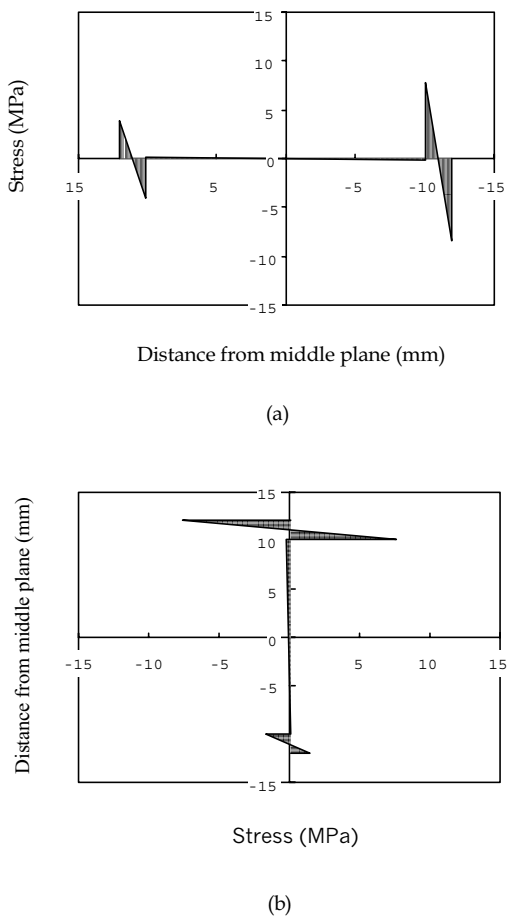

Fig. 4 Stress distribution within a sandwich pipe with (a) section C and (b) section A based on the multilayer-buildup theory

composite-beam theory can be applied to high-molulus pipes. For a composite sandwich pipe with a low degree of stiffness, the shear deformation is added to the deflection due to the bending moment. Therefore, the differences between the numerical and experimental results are quite large. The multilayer-buildup theory, which can be applied to the analysis of laminated structures, is characterized by a consideration of the relative displacement between interfaces. In our experimental results, the shear deformation can be taken into consideration because a foam material with a very low modulus was used as the core layer. Therefore, the deflections obtained from the multilayer-buildup theory are closer to the experimental results than those from the composite-beam theory.

CONCLUSIONS

An experimental investigation of a sandwich pipe was carried out, and the experimental results were compared to the theoretical calculations. The values obtained from the experimental results fall between the calculations based on the composite-beam and the multilayer-buildup

theories.

Table 2 Comparison of the experimental results and the two theories

Position	Expermental	Curved composite-beam		Multilayer-buildup theory	
		Calculation	Exp. / Cal.	Calculation	Exp. / Cal.
Outer radius	50.6	7.70	6.57	205	0.247
Inner radius	-126	-20.6	6.12	-444	0.283

ACKNOWLEDGEMENT

Dr. M. Xia acknowledges the financial support received from the New Energy and Industrial Technology Development Organization (NEDO).

REFERENCES

[1] Cheng, S., "On an accurate theory for circular cylindrical shells", *ASME Journal of Applied Mechanics,* 1973; Vol. 40, p.583-588.

[2] Cheng, S. and He, FB., "Theory of orthotropic and composite cylindrical shells, accurate and simple fourth-order governing equations", *ASME Journal of Applied Mechanics,* 1984; Vol. 51, p.736-744.

[3] Jones, IA., "Approximate solution to the orthoropic pinched cylinder problem", *Comp. Struc*, 1998; Vol. 42, p.73-91.

[4] Alderson, KL., "Evans KE. Failure mechanisms during the transverse loading of filament-wound pipes under static and low velocity impact conditions", *Composites,* 1992; Vol. 23, p.167-173.

[5] Nishiwaki, T., Yokoyama, A., Maekawa, Z., Hamada, H. and Mori, S., "A quasi-three-dimensional lateral compressive analysis method for a composite cylinder", *Composite Structures,* 1995; Vol. 32, p.293-298.