DAMAGE IN FIBRE-REINFORCED COMPOSITE LAMINATES SUBJECTED TO DYNAMIC LOADING

G. Tsigkourakos, H. Ullah, I.A. Ashcroft, V.V. Silberschmidt*
Wolfson School of Mechanical and Manufacturing Engineering, Loughborough University, Leicestershire, LE11 3TU, UK
*Corresponding author (V.Silberschmidt@lboro.ac.uk)

Keywords: *FRP; impact fatigue, micro CT; cracks; damage*

Abstract

Fibre-reinforced polymers (FRPs) became one of the most important structural materials in various industries due to a combination of characteristics such as excellent stiffness, high strength-to-weight ratio, and ease to manufacture shapes tailored for application. Hence, they are now broadly used in aerospace and naval structures as well as in automotive, construction and energy industry; there is an increasing use of them in sports products. In service, composite structures can be exposed to different loading conditions including multiple impacts. Such loading is called impact fatigue (IF) and can cause deterioration of structural integrity and load-bearing capacity due to induced damage. Composite laminates usually demonstrate multiple modes of damage and fracture due to their heterogeneity and microstructure, in contrast to more traditional homogeneous structural materials such as metals and alloys. The most prominent damage mechanisms in them are fibre breaking, transverse matrix cracking, delamination and debonding between fibres. Such events can take place without leaving evidence of the damage on the surface of the component, therefore, non-destructive techniques (NDT), such as X-ray micro-computer tomography (MCT), are required for characterisation of internal flaws. Advanced FE models were developed in Abaqus/Explicit to characterise the response of CFRP laminates to impact loading conditions in order to elucidate their dynamical mechanical behaviour. A 3d finite-element model for uniaxial tensional impact loading of tested samples of CFRP cross-ply laminates is presented. A hammer-specimen interaction is simulated directly to obtain detailed information about impact conditions.

The developed fully-transient explicit model serves as the first step in modelling damage in CFRP laminates under conditions of impact loading. To analyse initiation and evolution of multiple delamination in specimens of CFRP laminates, a cohesive-element approach is used.

1 Introduction

The use of carbon fibre-reinforced polymers (CFRPs) in the aerospace and other high technology industries has increased enormously in the last few decades and looks set for significant further expansion. This has been largely because of the high specific stiffness and strength of these materials. However, other properties such as fatigue resistance, property tailoring and manufacturing flexibility are also of significance in certain applications.

CFRP structures in aerospace, and other, structural applications are generally subjected to some form of cycling loading, i.e. fatigue. In the laboratory, fatigue is generally approximated as a sinusoidally varying load or stress, characterised by the load ratio, frequency and maximum force. This type of loading can be termed standard fatigue (SF). However, real-life loading histories often involve vibrating loads that can propagate in structural elements as cyclic impacts. This phenomenon is known as impact fatigue (IF) [1]. IF is of major importance to the structural integrity of components and structures due to its detrimental effect on performance, which can occur after a relatively small number of low amplitude cycles [1-2].

Fatigue loading can cause various types of damage in laminate composites; e.g. fibre breakage, transverse matrix cracking, de-bonding between fibres and matrix and delamination, resulting in a reduction of the residual stiffness and a loss of functionality [3-5]. More specifically, although CFRPs can carry large in-plane loads they have poor transverse properties, especially when subjected to

low velocity impacts, which has an impact on their in plane strength as well.

2 Experimental Details

2.1 Material Samples

Composite samples were made using unidirectional carbon/epoxy T700/LTM45 prepreg with a nominal ply thickness of 0.128 mm. The T700 fibre is used in the wings and the fuselage of airplanes and is known for its high strength. LTM45 is a toughened, low temperature curing epoxy resin capable of high-temperature end use. A symmetric cross-ply lay-up of $0_2/90_4/0_2$ was selected, as this enables a number of failure mechanisms to be investigated in a relatively simple system.

2.2 Specimen Preparation

The specimen configuration, as shown in Fig. 1, was adopted in conformity with BS EN ISO8256:2004, with modification to fit the tensile impact machine Figure 2. A central circular hole was introduced to facilitate damage initiation in pre-selected areas of high stress concentration.

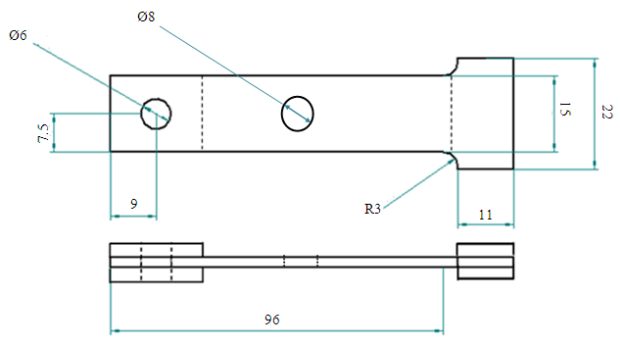

Fig. 1. Specimen for IF tests (dimensions of specimens in mm)

2.3 Uniaxial Tensile Impact Test

The tensile impact test used for our experiments utilises a CEAST RESIL impactor for multiple impacts with high-frequency data acquisition for each of them. In this method a specimen is supported at one end in a vice and its opposite end is struck repeatedly by a controlled pendulum hammer, resulting in a dynamic uniaxial tensile load (the loading system is shown in Fig. 2).

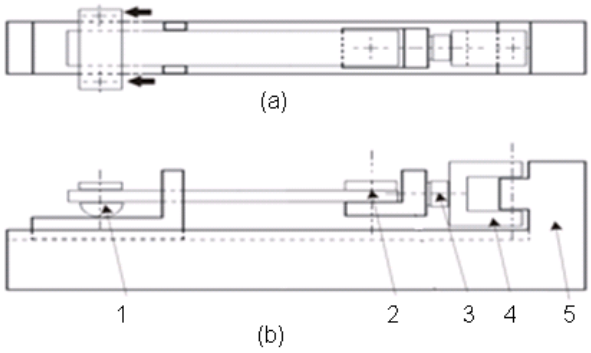

Fig. 2. Schematic of specimen fixture for impact fatigue: (a) top view, arrows denote impact loading direction; (b) side view. 1 – impact block; 2 – specimen; 3 – clamp; 4 – load cell and fixture; 5 - vice

2.4 X-Ray Microtomography

MCT measurements were performed using an XT H 225 system supplied Metris UK. The system consists of a one-dimensional x-ray detector that captures two-dimensional cross-sections of the object projected from an electronic x-ray source. The source is a sealed X-ray tube operating at 25–225 kV with a 3 μm spot size. The data in our studies were collected at 50 kV and 80 μA.

3 Finite-element Simulations

Advanced FE models were developed based on the Abaqus/Explicit code to characterise a response of CFRP laminates to impact loading conditions in order to elucidate their dynamical mechanical behaviour. A hammer-specimen interaction is simulated directly to obtain detailed information about impact conditions.

The developed fully-transient explicit model serves as the first step in modelling damage in CFRP laminates under conditions of impact loading. To analyse initiation and evolution of multiple delamination in specimens of CFRP laminates, a cohesive-element approach was used.

4 IF Test Results

Impact tests were conducted with a constant applied energy; this means that the applied force is not a controllable variable as it is affected by the deterioration of the specimen as a result of fatigue. Typical graphs showing the evolution of the force

response to impacts at various stages in a sample's life are presented in Fig. 3.

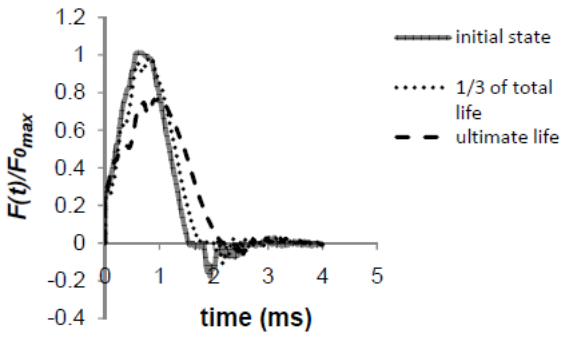

Fig. 3. Evolution of forces in specimen in various cycles of impact fatigue

This reduction of force magnitude can be explained by the loss of stiffness due to damage. This will be explained in the results and discussion section.

5 FEM Results

Transient analysis was carried out to determine the potential damage areas in the composite laminates. In Fig. 4 the region around the hole which has two 0° upper and lower plies is subjected to a maximum axial stress of 508 MPa. This is due to the highest stiffness value E_{11} of these plies in the axial direction. Damaged regions are proven to be the edges in the hole and 0/90 interfaces. The behaviour of damaged features in the initial FEM model is also represented in micro-CT figures in Section 6.

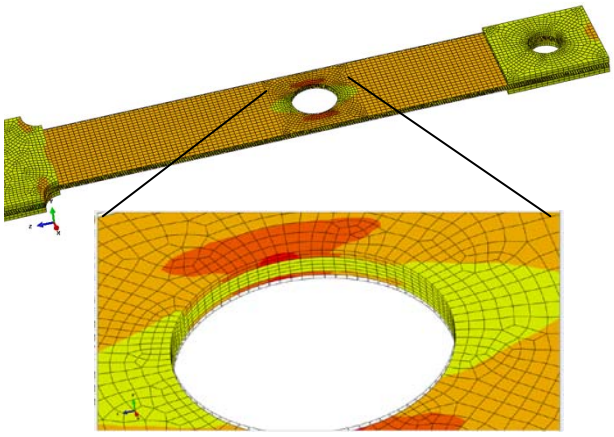

Fig. 4. Axial stress contours

6 Macroscopic and Microscopic Evaluation of Damage

Macroscopic evaluation at early stages of the fatigue life of samples revealed only 0° cracks in their outer plies. For that reason microscopic evaluation utilising X-rays was performed at different stages of the specimen's life, from the onset of damage till the final failure. In Fig. 5, the advanced stage of damage evolution in the specimen, exposed to the IF regime, is represented that contains all the damage mechanisms.

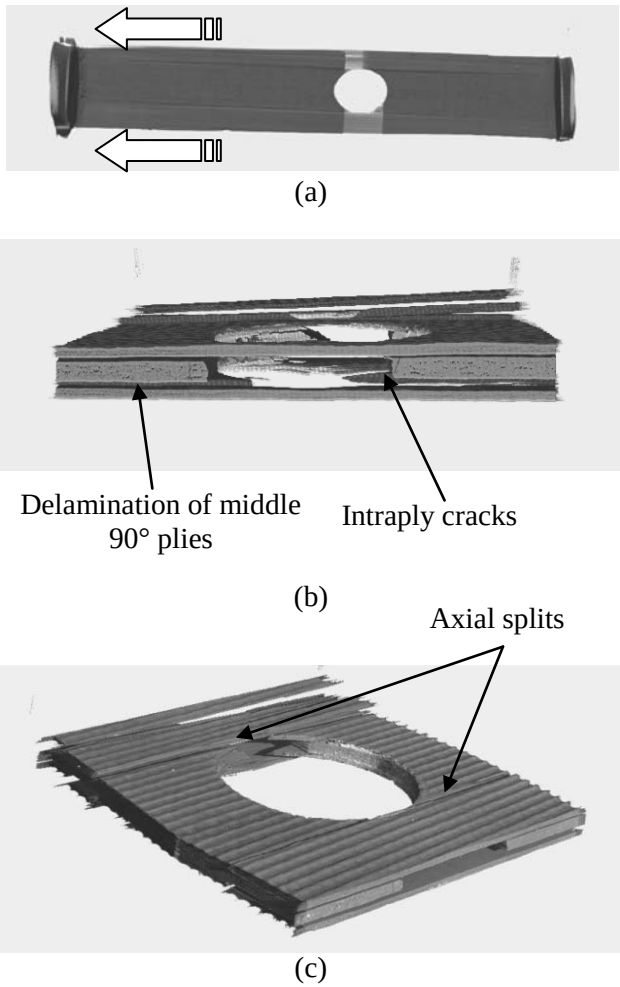

Fig. 5. (a) Macroscopic damage evaluation in CFRP specimen; arrows denote loading direction. (b) Side view of the 15 mm x 15 mm inspection area for microtomography. (c) 3D view of damaged inspection area.

7 Results and Discussion

In this paper a qualitative and quantitative analysis on the effect of IF in damage propagation was carried out by means of mechanical testing, MCT and numerical (finite-element) studies. Results showed that in cross-ply laminates a 20% decrease in stiffness can be caused by the growth of already existing microcracks/defects. More specifically, 0° splits in the direction of the loading that propagated towards the 0/90 and 90/0 interface is linked to this stiffness reduction. It has to be noted that the length of these cracks also increased along the length of the specimen and adjacent to the hole edges in the direction of the loading until the entire specimen's length was covered by them as shown in Fig. 5. These 0° splits created an increase in the distance between the 0° and 90° plies. It apparently initiated delamination in the specimen that was enhanced by transverse cracks in the 90° plies. A 20% stiffness decrease occurred at very early stages of the impact life (some 30-40%) and it was relatively small compared to a 50% decrease at the final stages of failure. Those final stages revealed a complete delamination pattern with 0° splits along the length of the specimen. More experimentation is required for analysis of damage states between 1/3 and the total impact life of the specimen to reveal the exact damage progression scenarios. However, based on our obtained results it can be concluded that the transverse crack formation is the basis for this major stiffness reduction since delamination was augmented after the 1/3 of life. This paper sets the foundation for a stiffness model applicable to IF regime and is a starting point for quantifying damage at various stages of life experimentally and numerically.

8 Conclusions

A significant stiffness decrease occurs at late stages of impact life in cross-ply laminates exposed to impact fatigue; it is governed by delaminations caused by transverse cracks and 0° splits. At the initial stages of specimen's life, 0° splits are the predominant failure mechanism and can be related to the observed 20% stiffness reduction. The fact that a 50% reduction of stiffness occurred when the 90° degree plies failed completely shows that although composites can carry large in-plane loads their mechanical properties can be seriously altered, especially when they are subjected to low-velocity impacts.

References

[1] J.P. Casas-Rodriguez, I.A. Ashcroft and V.V. Silberschmidt, "Damage evolution in adhesive joints subjected to impact fatigue". *Journal of Sound and Vibrations*, Vol. 308, pp 467-478, 2007.

[2] J.P. Casas-Rodriquez, I.A. Ashcroft and V.V. Silberschmidt, "Damage in adhesively bonded CFRP joints: sinusoidal and impact fatigue". *Composites Science and Technology*, Vol. 68, pp 2663-2670, 2008.

[3] I.A. Ashcroft, J.P. Casas-Rodriguez and V.V. Silberschmidt, "Mixed mode crack growth in bonded composite joints under standard and impact fatigue loading". *Journal of Materials Science*, Vol. 43, pp 6704-6713, 2008.

[4] T. Sınmazçelik, A.A. Arıcı and V. Günay, "Impact–fatigue behaviour of unidirectional carbon fibre reinforced polyetherimide (PEI) composites". *Materials Science*, Vol. 41, pp 6237-6244, 2006.

[5] M.Ö. Bora, O. Çoban, T. Sinmazçelik, I. Cürgül, V. Günay, "On the life time prediction of repeatedly impacted thermoplastic matrix composites". *Materials & Design*, Vol. 30, pp 145-153, 2009.