CARBON NANOTUBE NETWORK COMPOSITES FOR DAMAGE DETECTION USING TIME DOMAIN REFLECTOMETRY

G. Pandey[1], E.T. Thostenson[1,3]*, D. Heider[2,3]
[1]Department of Mechanical Engineering, [2] Department of Electrical and Computer Engineering
[3]Center for Composite Materials
University of Delaware, Newark, USA
* Corresponding author (thostens@udel.edu)

Keywords: *carbon nanotubes, damage sensing, health monitoring*

1 Introduction

Damage in composite materials occurs at multiple scales, from matrix cracking and fiber/matrix debonding to ply delamination, and is complicated due to the different failure mechanisms interacting with the composite microstructure. Recent progress in the development of advanced techniques for structural health monitoring (SHM) has been aimed at techniques capable of sensing damage *in situ* and in real-time.

There has been extensive research on the use of fiber optic Bragg gratings as internal crack sensors [1], but recent research demonstrates that these embedded sensors act as damage initiators due to stress concentrations [2, 3].

Recently, carbon nanotubes have been utilized as *in situ* sensors [4-8] to detect microcracking in fiber-reinforced composite materials. Nanotubes, due to their small size relative to the structural fiber reinforcement, are minimally invasive to the composite microstructure. Their low electrical percolation thresholds enable an electrically conductive nanotube network to be formed in the composite. Perturbation of the internal network results in a change in electrical resistance of the composite. In addition to damage, such a nanotube network can also detect strain *in situ*.

2 Time Domain Reflectometry

Time Domain Reflectometry (TDR) is a technique used by electrical engineers to detect faults in electrical transmission lines. Figure 1(a) shows the basics TDR setup of an arbitrary system under investigation. The TDR technique can determine the location of the damage through knowledge of the sensor length and TDR time. Recently, the TDR technique has been used to monitor the crack front location during fracture toughness testing [10]. The location-specific information with TDR cannot be obtained using traditional electrical techniques.

Earlier research using TDR for damage detection in structures have been based primarily on embedded transmission lines [11, 12]. Through suitable sensor design, surface-mounted non-invasive monitoring can be achieved. Figure 1(b) shows the parallel plate sensing approached used in this work. The surface-mounted metallic conductors act as a waveguide to enable the monitoring of the entire structure. Electric and magnetic fields penetrate the specimen between the metallic conductors and can detect changes in the material dielectric properties resulting from damage.

The present research is aimed at the development of an effective SHM technique which can be readily applied for monitoring of composite structures. Through nanoscale modification it is possible to alter the material electrical properties to enhance the sensitivity of the technique to damage.

2 TDR Impedance Testing and Strain/Damage

As illustrated in Figure 1(a) the TDR technique involves sending a voltage pulse through the transmission line and examining the reflection. Analysis of the reflected and incident waveforms is utilized to determine the impedance of the system. Figure 2 shows some typical TDR waveforms which have been obtained during the mechanical loading of glass fiber reinforced cross ply laminate. The TDR waveform changes with damage accumulation and strain as the electrical and magnetic field magnitudes change. It is necessary to quantify the information

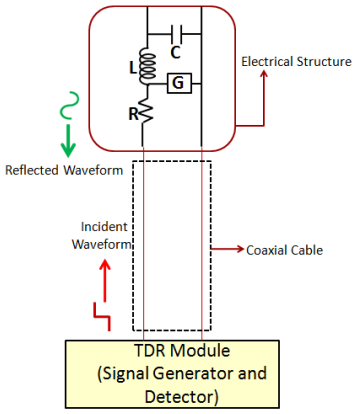

(a)

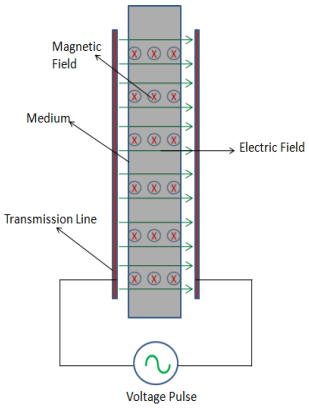

(b)

Fig. 1. (a) Schematic showing the TDR technique and (b) parallel plate sensor configuration.

carried by the TDR waveform in order to implement the TDR based damage detection system.

For parallel plate transmission line the sensor geometry and material properties can be related to the impedance by:

$$Z = \sqrt{\frac{\mu}{\varepsilon C}} = \frac{1}{\varepsilon}\sqrt{\frac{\delta\mu}{w}} \qquad (2)$$

where δ is plate separation, μ is magnetic permeability and ε is the dielectric constant. With damage accumulation in the form of cracks the electrical properties also change. For surface mounted sensors an increase in strain will also result in a thickness change due to Poisson contraction. This results in the changing TDR waveform observed in Figure 2.

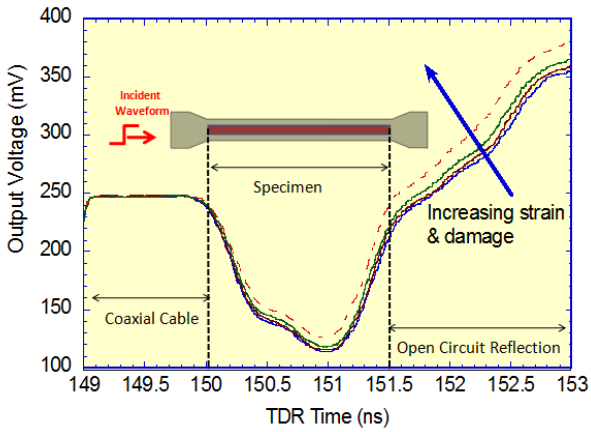

Fig. 2. TDR Traces obtained during the mechanical loading of cross ply laminates.

3. Strain Sensitivity

Carbon nanotubes were dispersed in a vinyl ester resin matrix, as described in Ref. [12], to examine the strain sensitivity of impedance. A three roll milling approach was used to uniformly disperse multi-walled carbon nanotubes (CM-95 Hanwha Nanotech) at a concentration of 0.5 wt% and then cured at room temperature. The nanotube / vinyl ester nanocomposite is above the percolation threshold. Dog bone-shaped tensile specimens having 10 cm gauge length and a rectangular cross section (12.70 mm X 3.15 mm) were prepared by casting the resin in a mold.

Figures 3 shows the effective impedance change under stepwise increasing cyclic loading of the nanocomposite. Since the impedance change was measured using a non-contact TDR measurement fixture so that there is no thickness change due to Poisson contraction. Unreinforced specimens do not show any impedance change with strain but the nanocomposites show an impedance change with applied deformation that is related to the changing dielectric properties. With the addition of nanotubes, the polymer becomes electrically active.

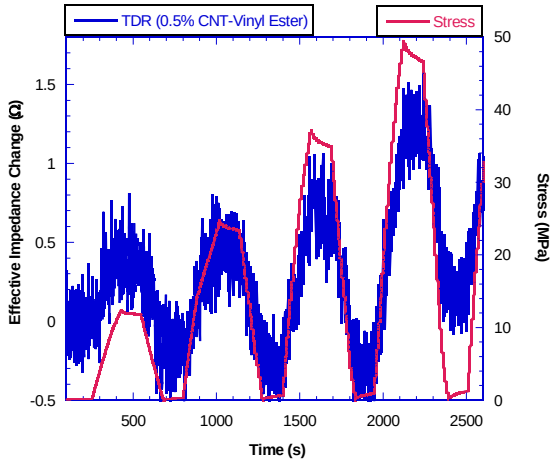

Figure 3: TDR response of 0.5% CNT-vinyl ester nanocomposites.

4. Composite Damage Sensing

It was well established in section that CNT-vinyl ester nanocomposites have self-sensing capabilities. If such a self-sensing capability can be introduced in fiber composites, it would be highly attractive from the point of view of structural applications. Already, the capability of TDR to detect damage in fiber composites with ply discontinuities has been discussed in the previous section. It is well known that cross ply laminates exhibit micro cracking in the transverse plies. Such a micro cracking happens at very low stresses and is a sub-surface phenomenon. In Figure 4, a micrograph of a specimen which has undergone micro cracking followed by delamination is shown.

TDR characterization was performed on $[0_2/90/0_2]$ glass fiber-Derakane specimen prepared using VARTM process and tensile specimen were prepared according to ASTM D3039 specifications. The center ply is prone to micro cracking damage and hence CNTs are introduced in the center ply using the CNT sizing process described in [13-14]. The CNT sizing process has an advantage that it is commercially scalable and introduces CNTs in a single step, under standard environmental condition.

Fibers on which CNTs need to be dispersed are first infused with a CNT sizing agent and then dried in an oven till the sizing agent evaporates, leaving the CNTs on the fiber surface. The rest of the composite fabrication process remains the same.

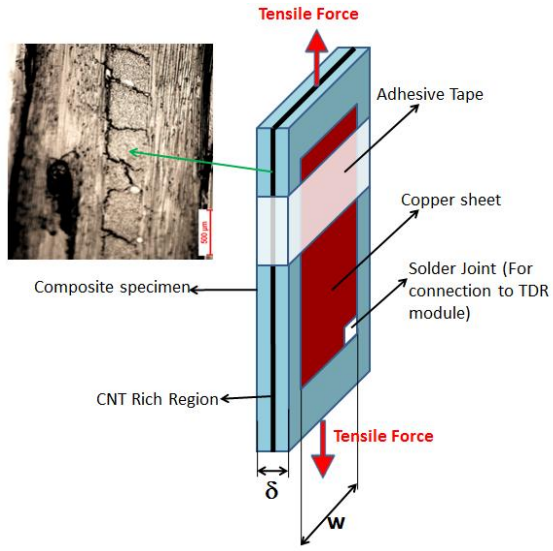

Figure 4. Composite specimen with parallel plate transmission lines.

Figure 5 shows that in addition to damage sensing capabilities, strain sensing capability is also there in CNT introduced laminates. Baseline laminates show an impedance change only at higher loading cycles corresponding to delamination. Hence CNT introduced laminates have an early warning capability to prevent catastrophic damage.

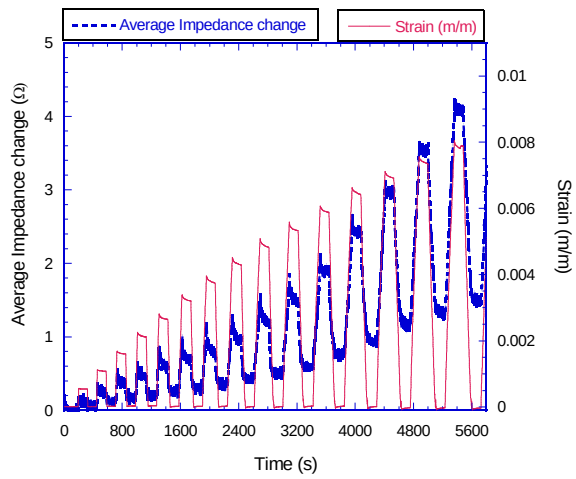

Figure 5. In addition to damage sensing, CNT introduced laminates have strain sensing capability.

5. Conclusions

It is possible to non-invasively detect sub surface damage using appropriately designed TDR sensors. *In situ* strain sensing is an added advantage of TDR sensing using parallel plate transmission line approach. Impedance change has been identified as a damage parameter and a procedure has been developed to extract impedance from raw TDR data. Due to their coupled electrical and mechanical properties, CNTs impart self-sensing capability to vinyl ester resin. CNTs introduced in the transverse layer impart micro crack detection capabilities to the fiber composite laminates. The TDR technique is based on changes in electric and magnetic field distribution in material media and does not require physical contact between the system under observation and the measurement system.

Acknowledgements

This research was supported by the Department of the Navy, Office of Naval Research grant number N00014-06-1-1000 Ignacio Perez, Program Director.

References

[1] G. Zhou G, LM Sim "Damage detection and assessment in fibre-reinforced composite structures with embedded fibre optic sensors – review," *Smart Materials & Structures*. Vol. 11, No. 6 pp 925-939, 2002.

[2] K. Shivakumar, A. Bhargava, "Failure Mechanics of a Composite Laminate Embedded with a Fiber Optic Sensor." *Journal of Composite Materials* Vol. 39, No. 9, pp 777-798, 2005.

[3] K. Shivakumar, L. Emmanwori, "Mechanics of Failure of Composite Laminates with an Embedded Fiber Optic Sensor." *Journal of Composite Materials* Vol. 38, No. 8, pp 669-680, 2005.

[4] E.T. Thostenson, T.W. Chou, "Carbon Nanotube Networks: Sensing of Distributed Strain and Damage for Life Prediction and Self-Healing." *Advanced Materials*, Vol. 18, No. 22, pp 2837-2841, 2006.

[5] E.T. Thostenson, T.W. Chou, "Real-Time in situ Sensing of Damage Evolution in Advanced Fiber Composites using Carbon Nanotube Networks." *Nanotechnology*, Vol. 19, No. 21, pp 215713, 2008.

[6] L.M. Gao, E.T. Thostenson, Z.G. Zhang, T.W. Chou, "Sensing of Damage Mechanisms in Fiber-Reinforced Composites under Cyclic Loading Using Carbon Nanotubes." *Advanced Functional Materials*, Vol. 19, No. 1, pp 123-130, 2009.

[7] A. Lim, Q. An, T-W. Chou, E. Thostenson "Mechanical and electrical response of carbon nanotube-based fabric composites to Hopkinson bar loading". *Composites Science and Technology*, Vol. 71,No. 5, pp 616-621, 2010.

[8] L. Gao, T-W. Chou, E. Thostenson, Z. Zhang "A comparative study of damage sensing in fiber composites using uniformly and non-uniformly dispersed carbon nanotubes". *Carbon* Vol. 48, No. 13, pp 3788-3794, 2010.

[9] A.A. Obaid, S. Yarlagadda, M.K. Yoon, N.E. Hager, R.C. Domszy, "A time-domain reflectometry method for automated measurement of crack propagation in composites during mode I DCB testing." *Journal of Composite Materials*, Vol. 40, No. 22, pp 2047–2066, 2006.

[10] M. W. Lin, J. Thaduri, "Structural Damage Detection Using an Embedded ETDR Distributed Strain Sensor." *Sensing and Imaging: An International Journal*, Vol. 6, No. 4, pp 315-336, 2005.

[11] G. Chen, H. Mu, D. Pommerenke, J. Drewniak, "Damage detection of reinforced concrete beams with novel distributed crack/strain sensors." *Structural Health Monitoring*, Vol. 3 No. 3, pp 225-243, 2004.

[12] E.T. Thostenson, S. Ziaee, T.W. Chou , "Processing and electrical properties of carbon nanotube/Vinyl Ester Nanocomposites." *Composites Science and Technology*, Vol. 69, No. 6, pp 801-804, 2009.

[13] L.M. Gao, T.W. Chou, E.T. Thostenson, A. Godara, Z. Zhang, L. Mezzo, "Highly conductive polymer composites based on controlled agglomeration of carbon nanotubes." *Carbon* Vol. 48 (2010): 2644-2673.

[14] L.M. Gao, T.W. Chou, E.T. Thostenson, Z. Zhang, "A comparative study of damage sensing in fiber composites using uniformly and non-uniformly dispersed carbon nanotubes." *Carbon* Vol. 48, pp 3788-3794, 2010.