A NOVEL APPROACH TO CHARACTERIZE TORSIONAL PROPERTY OF SINGLE FIBER

Y.N. Liu*, M. Li, Y.Z. Gu, Y.X. Li and Z.G. Zhang
Key Laboratory of Aerospace Materials and Performance (Ministry of Education),
School of Materials Science and Engineering, Beihang University, Beijing, 100191, China
* Corresponding Author (liuyanan@mse.buaa.edu.cn)

Keywords: *torsional property, carbon fiber, filament, elongation at break*

Abstract:

A novel approach to evaluate the torsional property of single fiber filament was established based on a self-designed apparatus. The number of torsion turns obtained from the direct torsion failure test was used to characterize the torsion bearing capacity of single fiber. Three types of carbon fibers were investigated, namely, T700S, T300, and M40. The number of torsion turns decreases in the order of T700S, T300 and M40, which agrees well with the elongation at break, implicating that the fibers with higher toughness provide better torsional property. The effect of fiber sizing agent on the torsion characteristics was also examined. It has been found that fiber sizing agent has no influence on the single fiber torsional properties. The effect of torsion speed was also considered. Results showed that the number of torsion turns for carbon fiber T300 decreases with increasing torsion speed, and levels off beyond the torsion speed of 50 r/min.

1 Introduction

Advanced polymer matrix composites are the most attractive material used in a myriad of fields due to their extraordinary performances. As reinforcement for composites carbon fiber has been studied intensively, and much attention has been paid to its tensile property. However, the fiber exhibits excellent tensile strength and modulus, the materials still always fail by torsional buckling in actual practice. Thus, the torsional property assessment of the fiber will be significant for the practical application of composites [1-2].

Wang [3] tested the torsion fatigue property of PBO fiber, in which the effects of pre-tension and twist angle on the torsion fatigue lifetime were discussed. Liu [4] analyzed the torsional fatigue of high performance fibers, indicating that the UHMWPE fiber was superior to aromatic fibers in resistance to torsion fatigue. However, existing references basically adopted the fiber strands as its subject. Research on the torsional property of single fiber filament was rarely reported, because more sophisticated obstacles such as high precision requirements make the test of single fiber torsion properties more difficult. The objective of the present investigation is to gain fundamental understanding of the torsion behavior of single carbon fiber. A self-designed apparatus was established to conduct the direct torsion failure test. Three types of carbon fibers were investigated. The effects of fiber sizing agent and torsion speed on the fiber torsion characteristics were also examined.

2 Experimental

2.1 Materials

Three types of high performance carbon fibers were adopted in this study, namely T300 (Toray, Japan), T700S (Toray, Japan) and M40 (Toray, Japan). Typical properties of the three candidates are

shown in Table 1. Sized fibers were used as received without any further treatment. In order to examine the effect of the sizing agent on the torsional property of carbon fiber, the sizing agent was removed by solvent extraction using acetone in a Soxhlet extractor, and then the decoating carbon fiber samples were also prepared.

Table 1. Typical fiber properties of carbon fiber T700S, T300, and M40.

Fiber type	Tensile Strength MPa	Tensile Modulus GPa	Elongation %
T700S	4900	230	2.1
T300	3530	230	1.5
M40	2740	392	0.7

2.2 Sample preparation

In order to fix a single fiber on the apparatus conveniently, a U-shape-frame paper holder was used, on which the tested fiber was bonded by double-side tape and superglue. The schematic diagram of the specimen is shown in Fig. 1. The fiber gauge length was 10 mm for all samples in this work.

Except for the convenience in processing, pre-bonding the fiber onto the paper holder can also keep the fiber taut during testing, which ensures the exactness and consistency of the gauge length.

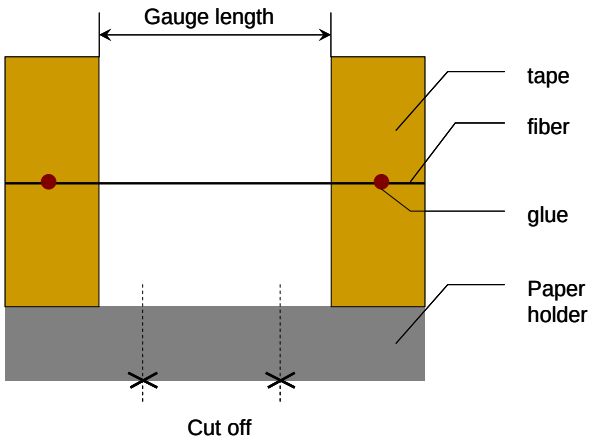

Fig.1. Schematic diagram of torsion test specimen.

2.3 Direct torsion failure test

The direct torsion failure tests were carried out on a self-designed apparatus, which is consisted of stress sensor, stepper motor and its driving system, shifting and turning clamps, fine tuning knob, and program control and data acquisition system. The schematic diagram of the apparatus was shown in Fig.2. Four steps were involved in the direct torsion failure test, namely, sample placement, initial stress balancing, torsion testing, and data acquisition.

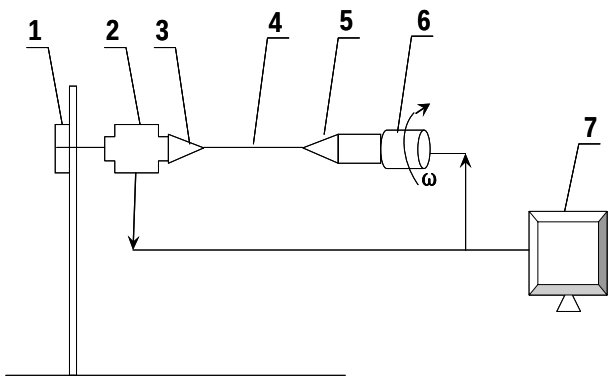

1-Fine tuning knob 2-Stress sensor 3-Shifting clamp 4-Tested fiber 5-Turning clamp 6- Stepper motor 7- Program control and data acquisition system

Fig.2. Schematic diagram of the apparatus for the direct torsion failure test

Firstly, test specimen was bonded to the clamps after drying at room temperature for 3 hours, and the paper holder was carefully cut off as shown in Fig.1. Secondly, the initial stress was adjusted to zero by slightly rolling the fine tuning knob, which simultaneously stretch the fiber to be tense. Thirdly, the shifting clamp was fixed by a pin bolt, and the torsion was initiated by turning the other clamp which is driven by the stepper motor. The process was controlled by self-written software connected to a personal computer. The test interface was shown in Fig.3, we can see that the program was capable of controlling on-off and torsion speed of the stepper motor, and recording the stress-torsional angle curve in real time. At last, the stress-angle curve and the initial data were recorded after the failure of fiber.

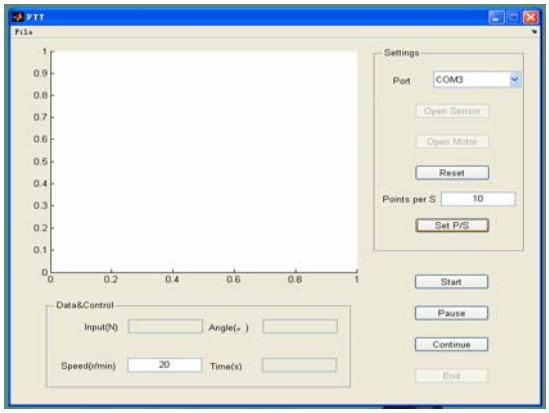

Fig.3. Software interface for the direct torsion failure test.

Owing to the mismatch between the micro-scale of the fiber diameter and the macro-scale of the clamp, the fiber deviate the apparatus axis slightly, resulting in fluctuation of the stress before the fiber failed. However, when the fiber rupture occurs, the size mismatch between the fiber and clamp does not affect the stress transfer any more, and the stress no longer fluctuated with the angle but manifested as a straight-line. Thus, the stress-angle curve can be used to indicate the failure of the fiber on time from the start point of the final straight line. A typical test result was shown in Fig.4. Ten specimens for each kind of carbon fiber were tested to obtain a mean value of the ultimate torsional angle, which was converted to number of torsion turns for the sake of convenience in comparison. A torsion speed of 20r/min was adopted to perform the test for all specimens.

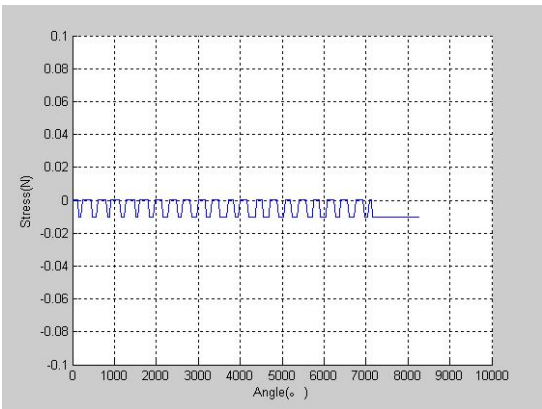

Fig.4. Typical stress-angle curve of T300 carbon fiber.

3 Results and Discussion

3.1 Number of torsion turns of three types of single carbon fibers

The number of torsion turns obtained from the direct torsion failure test was used to characterize the torsion bearing capacity of single fiber. The test results and elongation of carbon fiber T700S, T300, and M40 were shown in Fig.5. It can be seen that the number of torsion turns decreases in the order of carbon fiber T700S, T300 and M40B, with the number of torsion turns of 64.58, 19.86 and 15.12, respectively. And the coefficients of value (CVs) for all three kinds of fibers were under 10%, verifying the stability and reliability of the test system. We notes that the trend of the torsion bearing capacity for the three types of fibers agrees well with the elongation at break, implicating that fibers with higher toughness are superior to fibers with lower toughness in resistance to torsion shear stress.

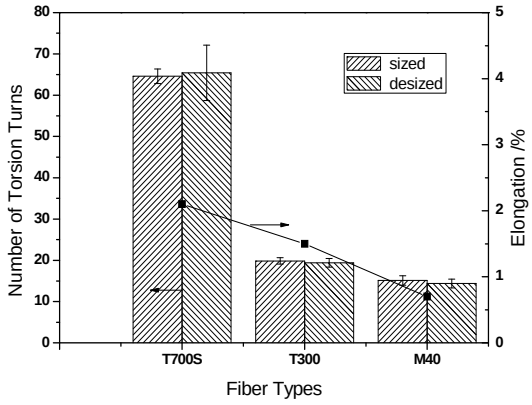

Fig.5. Number of torsion turns (left axis) and elongation at break (right axis) of different carbon fibers.

Fig.5 also indicates that the number of torsion turns almost keep constant after the sizing agent was removed, demonstrating that fiber sizing agent of single fiber have little influence on its torsion bearing capacity.

3.2 Effect of torsion speed on the torsional property

To investigate the effect of torsion speed on the shear-bearing property, the torsional property of carbon fiber T300 was characterized using the direct

torsion failure test apparatus. As seen from Fig.6, the number of torsion turns decreased approximately linearly with the torsion speed until a knee point at 50r/min, beyond which the number of torsion turns declined more slowly and leveled off. The number of torsion turns declined with the increase of the torsion speed may relate to the shear strain rate. Within the torsion speed of 50r/min, the strain sensitivity of the fiber was high enough for the fiber to deform. However, as the acceleration of the torsion, the strain rates of T300 carbon fiber rise rapidly, leading to the plastic deformation of the rigid fiber becomes more difficult, so the fiber is insensitive to the strain, resulting in the level off of the number of torsion turns in the curve.

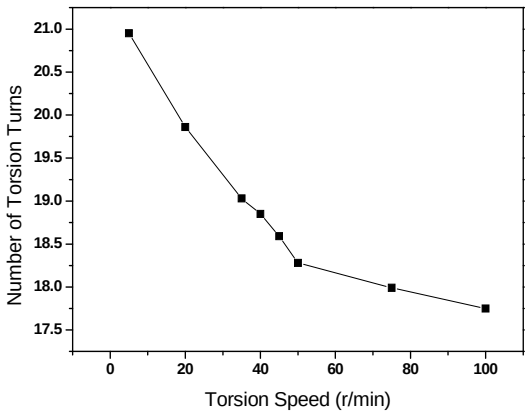

Fig.6. The number of torsion turns vs. torsion speed of T300 single carbon fiber

4 Conclusions

The torsion behavior of single carbon fiber was examined based on a self-designed apparatus in this work. The set-up was capable of unifying the gauge length, controlling the torsion speed, and indicating the fiber failure on time, which verified the stability and reliability of the test system.

The number of torsion turns was defined to characterize the torsion bearing capacity of single fiber. Three types of single carbon fibers were adopted in the test. Results show that the number of torsion turns decreased in the order of T700S, T300, and M40, which is consistent with the elongation at break, implicating that the fibers with higher toughness are superior to fibers with lower toughness in resistance to torsion shear stress. It is also indicated that fiber sizing agent has no influence on the torsional property. In addition, the torsion bearing capacity of carbon fiber T300 decreases with the increasing of torsion speed, and levels off beyond the torsion speed of 50r/min.

5 References

[1] S.P. Sharma, S.C. Lakkad. *Compressive strength of carbon nanotubes grown on carbon fiber reinforced epoxy matrix multi-scale hybrid composites.* Surface & Coatings Technology, No. 205, pp 350–355, 2010.

[2] HY, Feng. *Characterization of torsion fatigue of high-performance fibers*. Master dissertation of Donghua University, 2005.

[3] BG, Wang. *Analysis on the Torsion Fatigue Characteristic of PBO Fiber.* Shandong Spinning science and technology, No.3, pp27-29, 2010.

[4] XY, Liu, P, Xu, HP, Zhang, K, Lai. *Study on torsional fatigue fracture of high-performance fiber.* China Synthetic Fiber Industry, Vol.27, No.1, pp8-9, 2004.

Acknowledgements

The author wishes to express appreciations to Mr. Yuan and Mr. Di for their assistance with the preparation of the test apparatus.