Al/Ni Nanostructured Energetic Composite and Its Structure Characterization

Lyu Junjun[1, a], Guo Fei[1,b] and He Xiaodong[1,c]

[1] *Institute of Chemical Materials, CAEP, Mianyang, Sichuan 621900, China*
[a]*b19880216@163.com*, [b] *guof_caep@163.com*, [c]*hexd1987@163.com*

1 INTRODUCTION

Nanomaterials are a topic of increased interest for many applications. Reactive Al/Ni multi-layer thin film can produce rapid bursts of heat and light through a homogeneous or self-propagating reaction[1-3]. The exothermic reactions can be ignited using pulses of electrical, mechanical, optical, or thermal energy[4]. In this paper, Al/Ni nano multi-layer thin film was fabricated using magnetron sputter deposition. Then, taking advantage of standard photolithography and developing technology, a type thin film current-carrying device was fabricated and tested. Because the structure of Al/Ni energetic composite is a key factor of the current-carrying device[5], in this paper, we characterized the Al/Ni thin film structure using SEM, TEM and Neutron scattering method. And these methods are effective means for characterization of nanometer thin films.

2 FABRICATION OF Al/Ni THIN FILM AND ITS STRUCTURE CHARACTE-RIZATION

Fig.1(a) and (b) showed a photograph of current-carrying device constituting of two main electrodes and a trigger electrode. A magnetron sputter was employed to generate a Al/Ni multi-layer on the polished surface of the ceramics which was used as substrate. Fig.1 (d) showed scanning electron microscopy (SEM) of the multi-layer cross section.

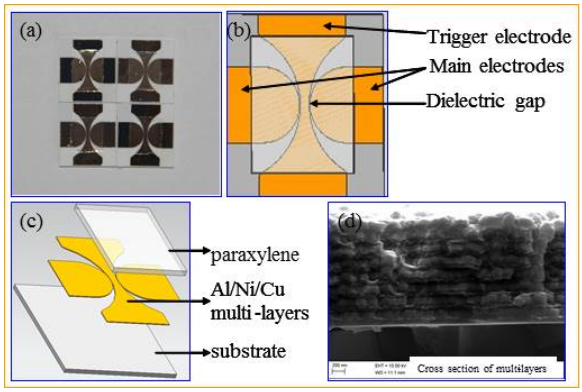

Fig.1 photograph and SEM of current-carrying device

Fig.2 is TEM image of Al/Ni nanostructured film. It reveal that the interfaces between sputter deposited aluminum and nickel are sharp and Orderly arranged. Form the result, the total thickness of the film is about 4um, and the modulation period of the multi-layer film is about 500nm.

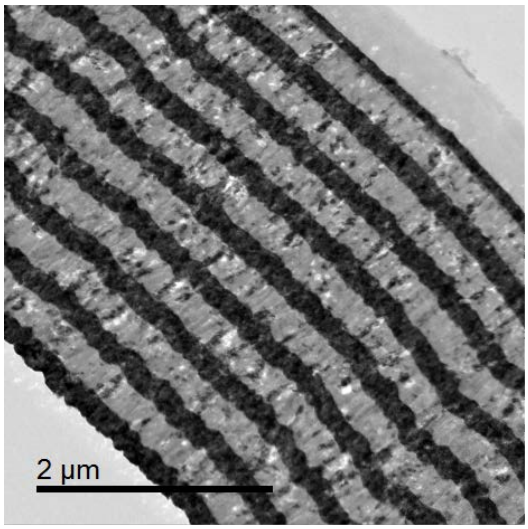

Fig.2 TEM image of Al/Ni nanostructured film

3 CURRENT MEASURE-MENT

The thin film device in our work were connected to a capacitive discharge circuit and tested, and a 0.22 μF capacitor was charged to a certain volts. One pulse trigger voltage which was applied between trigger electrode and ground of the circuit was employed to initiate the actuation of the switch. DPO3054 oscillograph and a Rogowski coil current transformer were utilized to monitor the current waveform of the circuit.

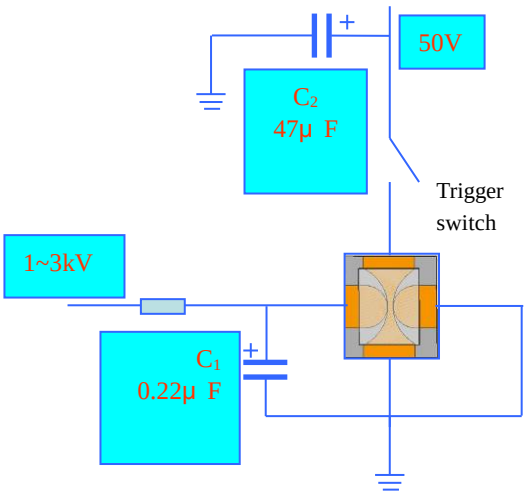

Fig.3 Schematic of discharge circuit of the thin film device

4 INDUCTANCE CALCULATION

The discharge property of the current-carrying device was compared with a commercial stereo switch. Fig.4 showed the current traces of the current-carrying device. Fig.5 shows the current traces of the circuit when current-carrying device was replaced by a commercial stereo switch.

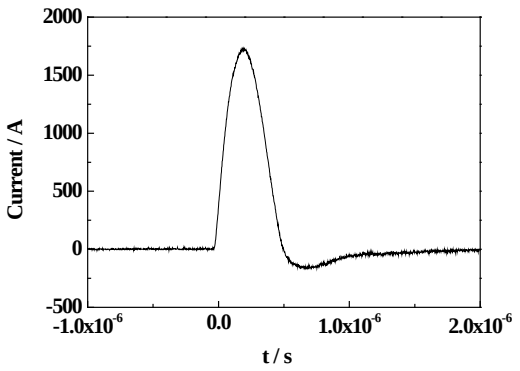

Fig.4 typical current wave when charge voltage is 2000V(current-carrying device)

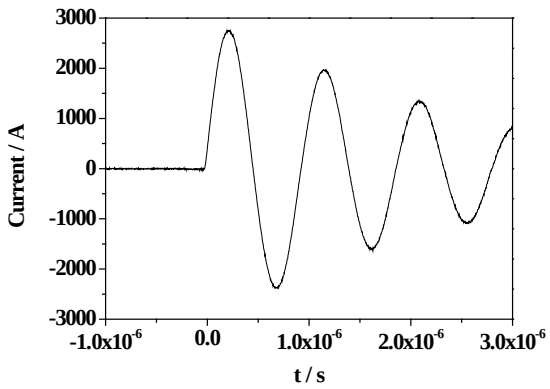

Fig.5 typical current wave when charge voltage is 2000V(commercial switch)

We treat the capacitor discharge circuit as a certain simple RLC circuit. C is the capacitor which value is 0.22 μF. When the L and R are treated as constant, the circuit can be described by following equation:

$$R = \frac{2L}{T_1} \ln \frac{I_{1\max}}{I_{2\max}} \qquad (1)$$

$$L = \frac{T_1^{\,2}}{C} \left[4\pi^2 + \left(\ln \frac{I_{1\max}}{I_{2\max}} \right)^2 \right]^{-1} \qquad (2)$$

where, $I_{1\max}$ is the first peak current value; $I_{2\max}$ is the second peak current value; T_1 is the first discharging cycle of current waveform. All the three parameters can be obtained from current waveform showed in Fig.4 and Fig.5. According to equation (1) and (2), the lumped inductance and resistance can be calculated. Compared with commercial stereo switch, it indicated that the inductance of the metal switch is lower, but the resistance is higher.

Using PVD and CVD technology, a type current-carrying device was fabricated and we characterized the Al/Ni thin film structure using SEM, TEM and Neutron scattering method. And these methods are effective means for characterization of nanometer thin films. Then, the discharge property of the current-carrying device was discussed.

References

[1] Mann A B, Gavens A J, Reiss M E, et al. Modeling and characterizing the propagation velocity of exothermic reactions in multilayer foils[J]. J Appl Phys, 1997, 82(3): 1178-1188.

[2] Rothhaar U, Oechsner H, Scheib M, et al. Compositional and structural characterization of temperature-induced solid-state reactions in Al/Ni multilayers [J]. Phys Rev B, 2000, 61(2): 974-979.

[3] Swiston A J Jr, Hufnagel T C, Weihs T P. Joining bulk metallic glass using multilayer foils[J]. Scripta Mater, 2003, 48: 1575–1580.

[4] Fritz G M, Spey J S, Grapes M D. Thresholds for igniting exothermic reactions in Al/Ni multilayers using pulses of electrical, mechanical and thermal energy[J]. J Appl Phys, 2013, 113: 014901.

[5] Morris C J, Mary B, Zakar E, et al. Rapid initiation of reactions in Al/Ni multilayers with nanoscale layering[J]. Journal of Physics & Chemistry of Solids. 2010, 71(2): 84-89.