# CONSTRUCTION OF 3D PRINT OF GLASS COMPOSITE MATERIAL USING LIGHT-CURING RESIN AND EVALUATION OF MECHANICAL PROPERTIES

Yukako Sano[1], Ryosuke Matsuzaki[2]

[1] 2641 Yamazaki, Noda, Chiba 278-8510, Japan, j7512056@ed.tus.ac.jp
[2] 2641 Yamazaki, Noda, Chiba 278-8510, Japan, rmatsuza@rs.tus.ac.jp

**Keywords:** 3D printer, SLA, GFRP, Tensile test

## ABSTRACT

We examined the construction and mechanical characteristics of composite materials formed using a light modeling SLA (stereolithography)-type 3D printer. 3D printers in their current state are unsuitable for existing processing methods and complex molding, as integral structure molding for targeted mechanical properties lower the resin itself, and cannot be realized at present. Given that conventional fused deposition modeling has issues pertaining to large voids between filaments, SLA is capable of creating a laminate by mixing fibrous materials with small resin voids. Therefore, in order to improve the material properties of the resin, glass fibers were mixed in, and the molding and its mechanical properties were evaluated with an SLA-type 3D printer. To confirm the effects of the fiber additive on the resin's formation properties, a test piece was formed using short glass fibers (with an average length of 20 mm) and glass powder (with an average particle diameter of 30 μm). The test piece obtained by mixing additional short glass fibers did not have good formability. Specimens mixed with the glass powder were moldable with up to 50 wt% added powder. To confirm the effect of the fiber material contents on the mechanical properties, resin test pieces with different glass powder contents were subjected to tensile testing. Increasing the glass powder content resulted in a 2.1-fold increase in the tensile strength and a 6.4-fold increase in the Young's modulus.

## 1 INTRODUCTION

3D printers are capable of complex modeling, which cannot be achieved using existing processing methods. It is also a possible integrated modeling what was to complete a combination of a plurality of parts to this[1].In addition, there is a feature that allows easy production and storage of small-lot products without the need of a mold. It has also been assumed that it can enable the production of made to-order artificial limbs and tailor-made bones to fit the human body for medical and welfare equipment applications. It also enables the production of durable automotive parts without any mold, thus reducing storage and repair costs.

In the general use of a 3D printer, the low mechanical properties of the resinare a principal concern in the fabrication of prototype models and toys, for structural fabrication of a practical level is not suitable. Therefore, the fabrication of high-strength products is necessary. In the present study, the technology of molding a composite material in the SLA-type 3D printer was developed (Fig. 1). Although fused deposition modeling was used, there were problems in the structural members, such as the presence of large voids between filaments. SLA with fewer occurrences of voids tends to show relatively good accuracy[2][3]. A composite laminate can be produced by mixing short glass fibers in a resin[4].

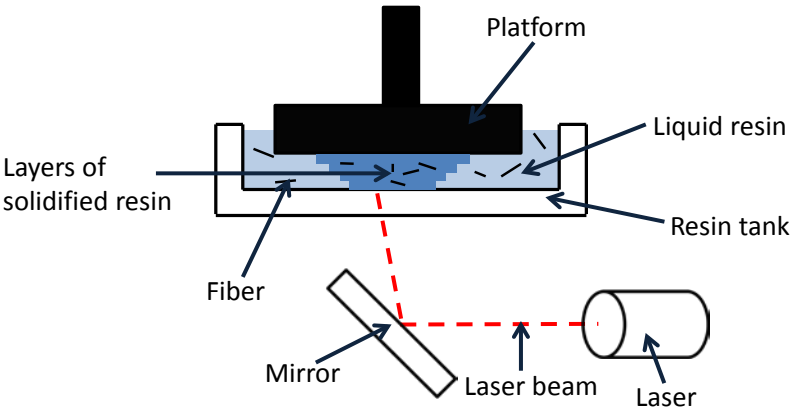


Fig. 1: Schematic diagram of the composite stereolithography.

## 2 EXPERIMENTAL

In this research, we used XYZ Printing's stereolithographic 3D printer Nobel 1.0. The light-format 3D printer irradiates a liquid resin with UV laser light from the bottom of the resin to cure its irradiation surface. After curing one layer, the platform is raised and the next layer is cured; the laminate formation is repeated to complete the model. Printing main body reads 3D model and prints. In this experiment, glass fiber was used as the fiber material, and fibers with different lengths were added to the resin to prepare and compare test piece moldability and evaluate the mechanical properties of the resultant specimens. The fiber material was placed in a resin bath, and a test piece was printed. In this study, three kinds of short fibers with an average length of 20 mm (Fig. 2(a)) and glass powder with an average particle length of 30 μm (Fig. 2(b)) were used as the fibrous material. The influence of the length of fiber material on the formability of the test piece was evaluated. A photo-curing resin (epoxy resin) manufactured by XYZ Printing Co., Ltd. was used. Dumbbell type with reference to JIS K 7162

Test specimens were prepared with a stacking pitch of 0.1 mm. For test specimens, samples with 10, 20, 30, 40, 50, and 55 wt% glass powder were prepared in order to see the effect of the fiber material content. Using a planetary stirrer, the glass powder was agitated in the resin. As shown in Fig. 3, a test piece with up to 50 wt% glass content could be produced, but when the content was 55 wt%, the printing accuracy was very poor. In the test piece (Fig. 4) mixed with short fibers, the fibers were concentrated in the first layer and could not be printed uniformly. When looking at the resin tank after printing, the glass short fiber in the portion where printing was performed was lost.


(a) Short glass fibers


(b) Glass powder

Fig. 2: Glass fiber material.

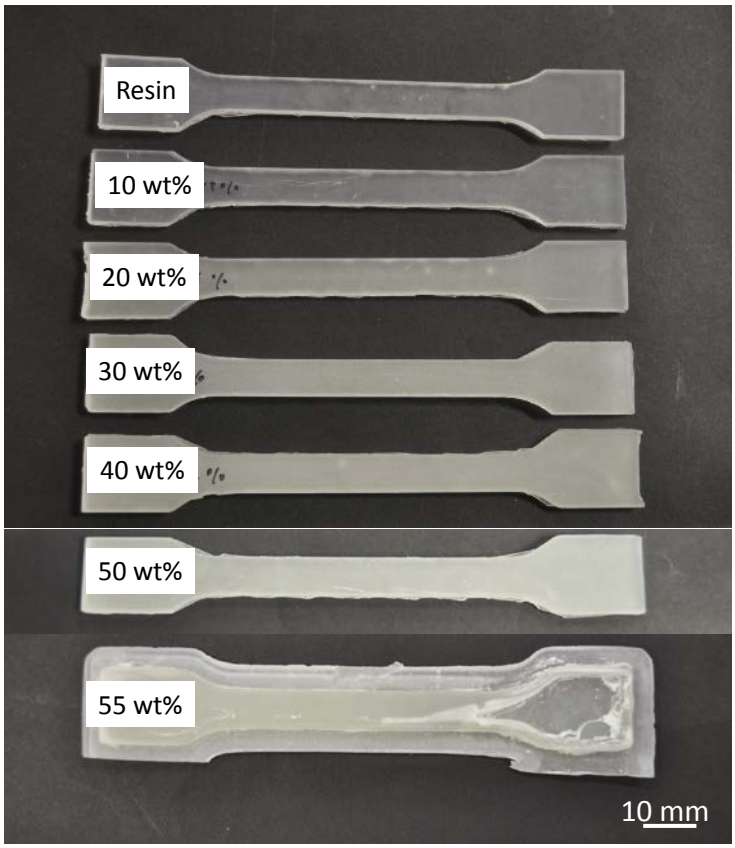


Fig. 3: Glass powder test specimen.

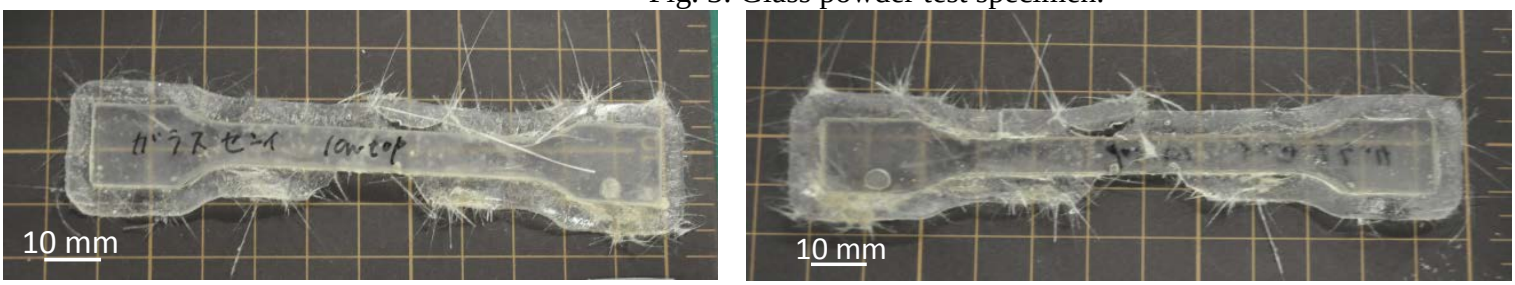


(a) Front side (b) Back side

Fig. 4: Tensile specimen of dumbbell shape made of light-cured resin that contains the short glass fibers

## 3 RESULTS

In order to evaluate the mechanical properties of the glass powder test piece and the glass cloth test piece, a tensile test was carried out at a load speed of 1.0 mm/min. A stress-strain diagram (Fig. 5), tensile strength (Fig. 6) and Young's modulus (Fig. 7) were calculated from the data obtained from the tensile test. It was confirmed that both the tensile strength and Young's modulus were improved by increasing the glass powder content. In addition, the mechanical properties of the specimens that were made with the glass cloth were greatly improved compared to those of the glass powder test specimens. The tensile strength of the glass powder specimens was found to be 2.1 times that of the specimens containing only resin, and the Young’s modulus of the glass powder specimens was found to be 6.4 times that of the specimens containing only resin.

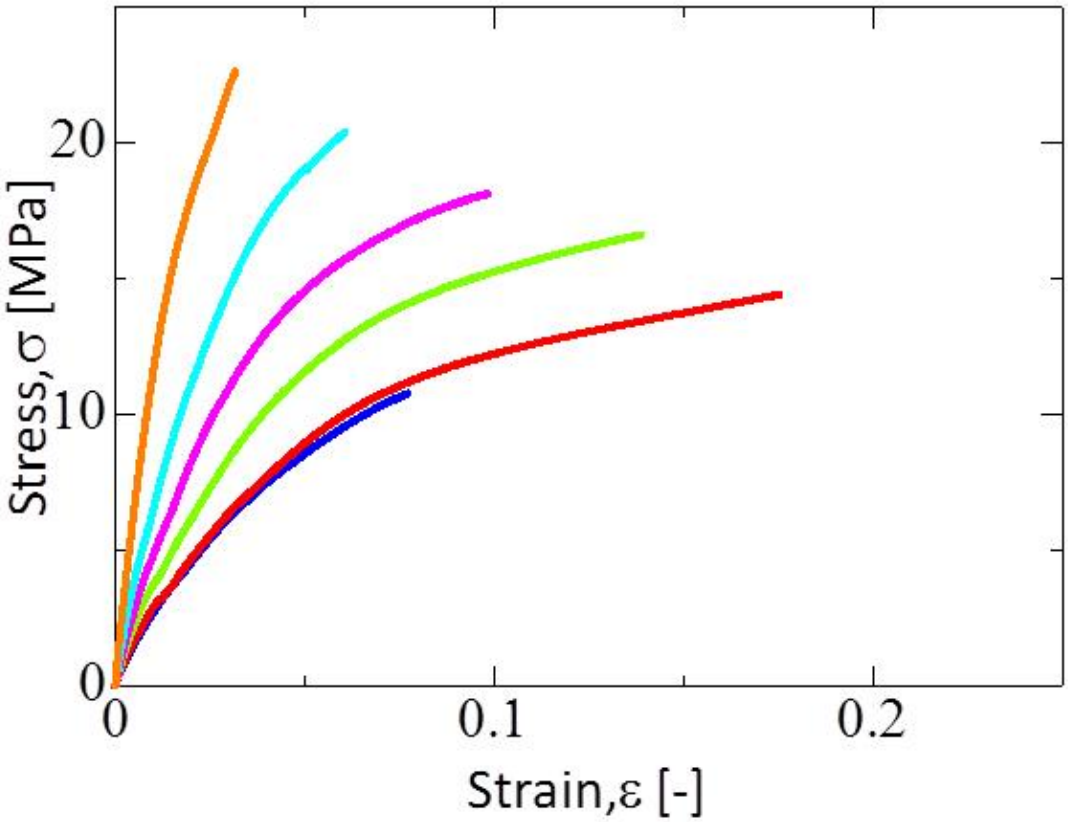


Fig. 5 Stress–strain curves of test pieces containing glass fibers.

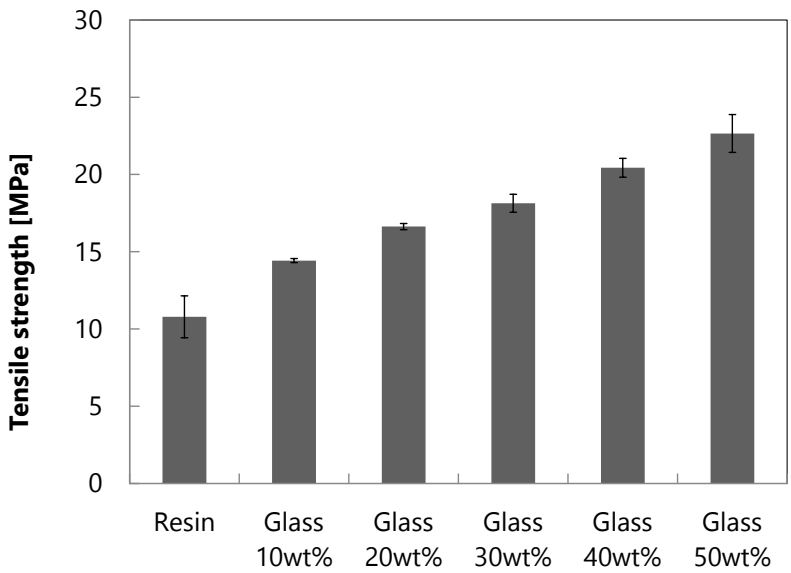


Fig. 6: Tensile strength of test pieces containing glass fibers.

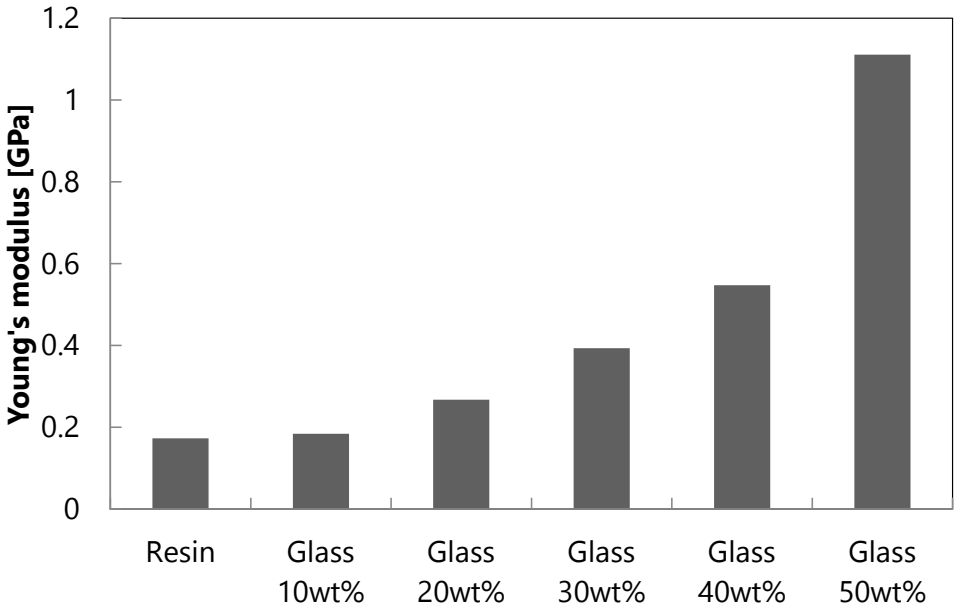


Fig. 7: Young's modulus of test pieces containing glass fibers.

## 4. Conclusion

This studyproposed the use of a stereolithography-format 3D printer for modeling composite materials. The test specimens were prepared and their mechanical properties were investigated. The results obtained in this study are as follows:

(1) It was confirmed that the composition of the test specimens (short glass fibers mixed with resin or glass powder mixed with resin) affected their moldability. The specimen with short glass fibers showed good formability, while the other was moldable even at glass powder contents as high as 50 wt%; however, the moldability deteriorated when the glass powder content increased to 55 wt%.

(2) The tensile strength of the glass powder specimens was found to be 2.1 times that of the

specimens containing resin, and the Young's modulus of the glass powder specimens was found to be 6.4 times that of the specimens containing resin.

## REFERENCES

(1) X. Yan and P. Gu, "A review of rapid prototyping technologies and systems," *Computer-Aided Design,* vol. 28, pp. 307–318, 1996/04/01 (1996).

(2) B. Berman, "3-D printing: The new industrial revolution," *Business Horizons,* vol. 55, pp. 155–162, 3// (2012).

(3) B. G. Compton and J. A. Lewis, "3D-Printing of Lightweight Cellular Composites," *Advanced Materials,* vol. 26, pp. 5930-+, (2014).

(4) S. Dul, L. Fambri, and A. Pegoretti, "Fused deposition modelling with ABS-graphene nanocomposites," *Composites Part a-Applied Science and Manufacturing,* vol. 85, pp. 181-191, (2016).

(5) R. Matsuzaki, M. Ueda, M. Namiki, T. K. Jeong, H. Asahara, K. Horiguchi, *et al.*, "Three-dimensional printing of continuous-fiber composites by in-nozzle impregnation," *Scientific Reports,* vol. 6, (2016).

(6) F. D. Ning, W. L. Cong, J. J. Qiu, J. H. Wei, and S. R. Wang, "Additive manufacturing of carbon fiber reinforced thermoplastic composites using fused deposition modeling," *Composites Part B-Engineering,* vol. 80, pp. 369–378,(2015).

(7) D. M. Baek, J. K. Park, S. A. Son, C. C. Ko, F. Garcia-Godoy, H. I. Kim, *et al.*, "Mechanical properties of composite resins light-cured using a blue DPSS laser," *Lasers in Medical Science,* vol. 28, pp. 597–604, (2013).

(8) T. Brosh, Y. Ganor, I. Belov, and R. Pilo, "Analysis of strength properties of light-cured resin composites," *Dental Materials,* vol. 15, pp. 174–179,(1999).

(9) J. R. Tumbleston, D. Shirvanyants, N. Ermoshkin, R. Janusziewicz, A. R. Johnson, D. Kelly, *et al.*, "Continuous liquid interface production of 3D objects," *Science,* vol. 347, pp. 1349–1352, (2015).

(10) S. Q. Zhao, Y. T. Qian, H. Liu, L. L. Jiang, and L. Zhou, "The Effect of Preheating on Light Cured Resin Composites," *Journal of Hard Tissue Biology,* vol. 21, pp. 273–278, (2012).

(11) M. P. Lee, G. J. T. Cooper, T. Hinkley, G. M. Gibson, M. J. Padgett, and L. Cronin, "Development of a 3D printer using scanning projection stereolithography," *Scientific Reports,* vol. 5,(2015).

(12) K. Xu and Y. Chen, "Mask Image Planning for Deformation Control in Projection-Based Stereolithography Process," *Journal of Manufacturing Science and Engineering-Transactions of the ASME,* vol. 137, (2015).